2027

Prices effective November 9, 2026

GREENE®

An ISO 9001:2015 Registered Company
www.greenestairs.com



41774 Main Street; PO Box 191
East Lynn, IL 60932
217-375-4244; Fax 217-375-4245

All Galvanized Material
F.O.B. East Lynn IL 60932
Prices subject to change without notice

Revised 11/09/2026

Contents

Sidewall Stairs	4
C-Series Sidewall Stairs	4-10
A-Series Sidewall Stairs	11-16
A-Series Gates	17
Easy Step Stair System	18-19
Hi-Lo Roof Stair to Manhole Configuration	20
Platform Illustrations	21
Original Sidewall Stairs	22-23
Straight Up Stairs	22
A-Series Landing with Variable Stairs	24
A-Series Truck Probe Service Platform and Stairs	25
Roof Packages	26
C-Series Walkarounds & Roof Stairs	26
C-Series Farm Duty Roof Packages	27
Easy Step Roof Ladder Handrail	28 - 29
Easy Step Roof Stairs	30 - 31
Easy Step Peak Handrail	32
Easy Step Walkarounds	33
A-Series Roof Stairs	34 - 35
A-Series Roof Deck	36
A-Series Walkarounds	37
Perimeter Safety Rail	38
Mid Roof Handrail	39
A-Series Sidewall Deck (Eave Walkaround)	40 - 41
Material Handling Access and Support	42
Manwalk Supports	42
Manwalk	43
Cut In Hatch	43
A-Series Manwalk	44
A-Series Variable Stairs	45
A-Series Foundation Deck	46
A-Series Tower Stairs	47
Conveyor Support	48
Conveyor Support Wall Mount Towers	49
Box Frame Support Towers	50
Support Rings	51
Tools	51
Loop End Towers	52 - 53
Wall Mount Loop Supports	54 - 55
Contact Information	56

Roadmap to Safety

Farm Packages

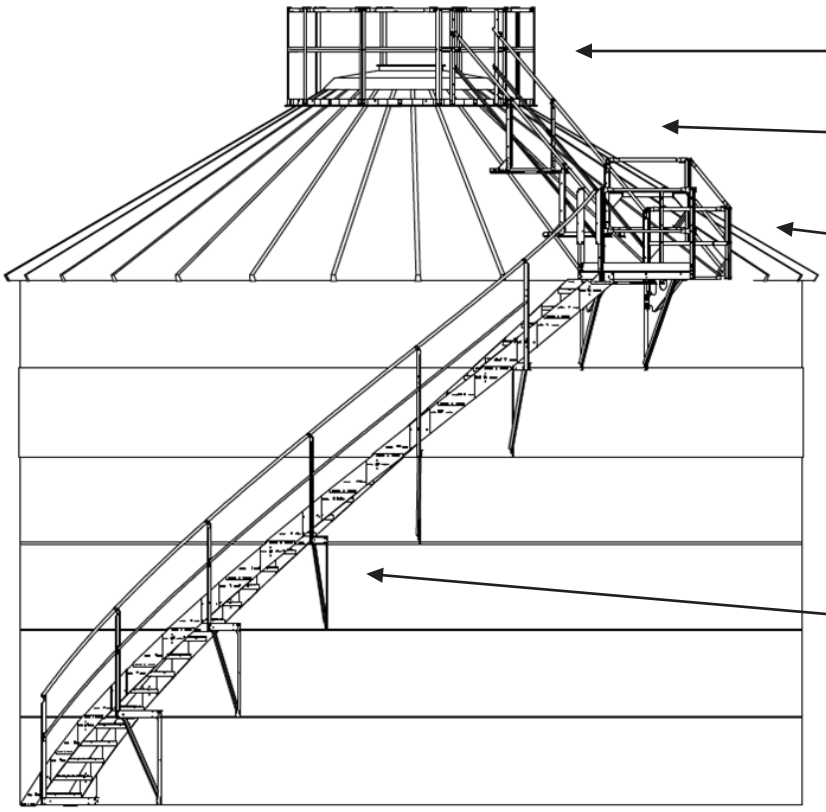

ES Peak Handrail
Page 32

ES Roof Ladder Handrail
Page 28-29

Manhole Guardrail
Page 29

C-Series Farm Duty
Sidewall Stairs Page 4-10

Commercial Packages

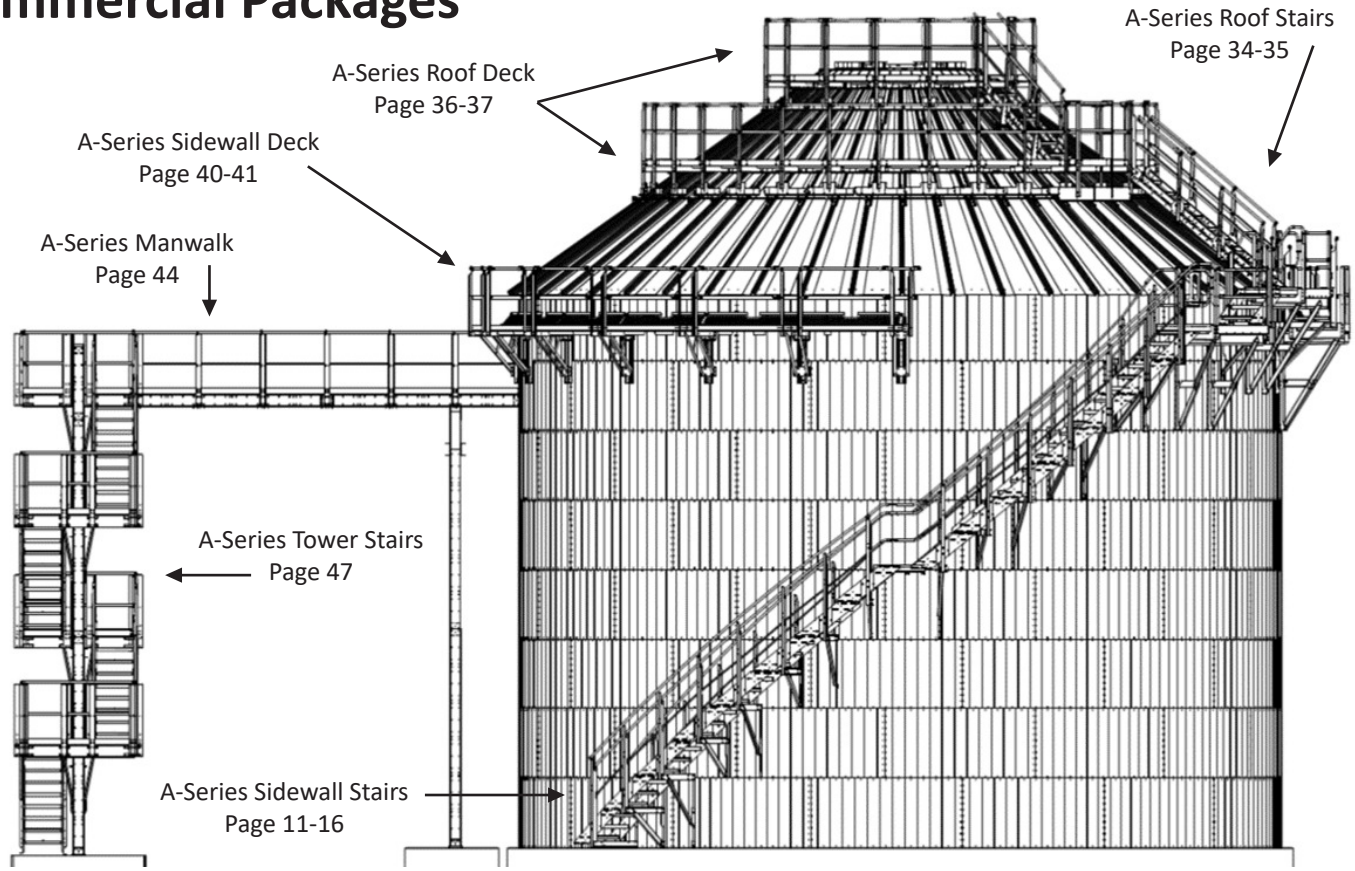

A-Series Roof Stairs
Page 34-35

A-Series Roof Deck
Page 36-37

A-Series Sidewall Deck
Page 40-41

A-Series Manwalk
Page 44

A-Series Tower Stairs
Page 47

A-Series Sidewall Stairs
Page 11-16

Product Line Card Available

C-Series Sidewall Stairs

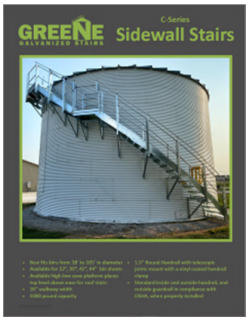

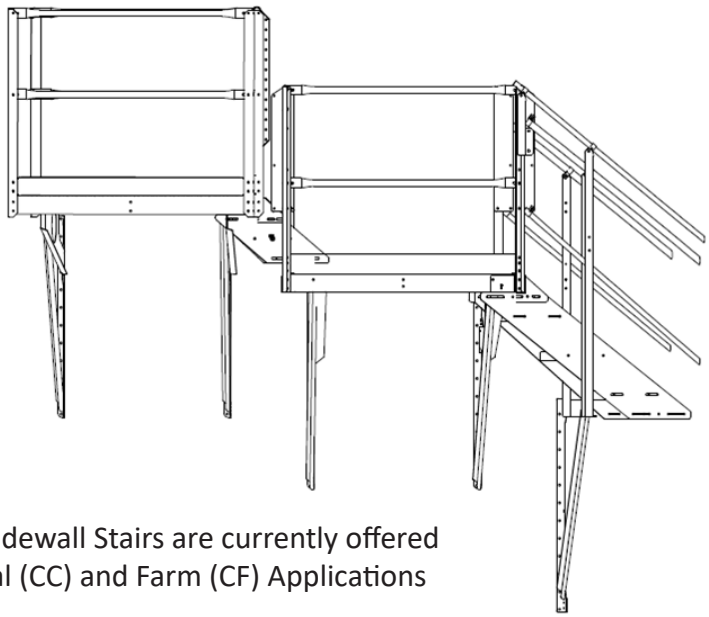

The C-Series Sidewall Stairs are currently offered for Commercial (CC) and Farm (CF) Applications

- *The C-Series Commercial (CC) Sidewall Stairs were designed to offer compliance when egress standards are not expected*
- *The CC packages offer a 24 inch walkway and an inside and outside railing with a guardrail on the exposed side and provides 9 inches of clearance from the bin wall for stiffeners and wind rings*
- *The C-Series is capable of fitting bins 18 ft in diameter to 156 ft in diameter*
- *Platforms can be placed at any elevation as any normal step (Contact us to quote your custom elevation)*
- *Two lengths of trapezoid platforms help to eliminate gaps between platform and top step*
- *CF modules do not include an inside railing or guard rail on the exposed side*
- *CC packages include wide stair platform 4.4" above eave and long intermediate platform 12" below inspection portal, a self closing gate, as well as rest landings every 6 wide rings*
- *CF packages do not include a gate or rest landings and have one platform 4.4" below eave*
- *New option for Farm Duty Packages incorporates a wide platform 4.4" above the eave for Roof Stairs transition. *Required for C-Series Roof Stairs.*
- *5 different sizes: 44", 42" (Chief), 42" with 2.66" Corrugation, 39", & 32"*
- *For adjacent bins sharing one standard width platform, space bin walls 40" apart, if using a twin platform space 72" apart . For larger spans refer to page 21 for the use of crossover platform*

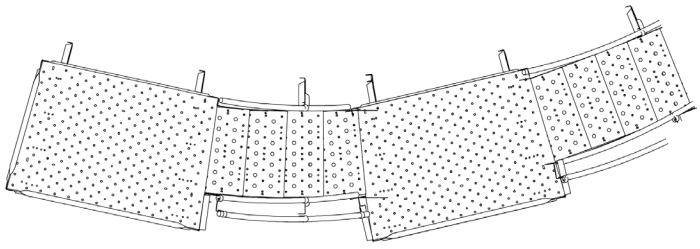

CC Double Eave Platform

CF Single Long Platform

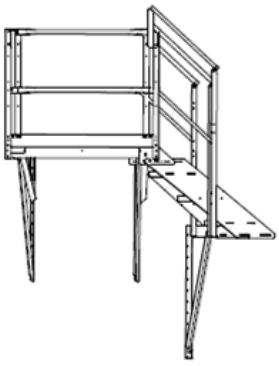

C-Series Sidewall Stairs

The individual units are listed below, replace the 44 with the ring height as seen on the following pages. Example: CC3544L is the first line item when ordered for a 44” wide corrugation bin. For a 42” with 2.66” corrugation, order CC3546L.

NOTE: Stairs for the stem wall ARE NOT figured in the C-Series Stair packages. Call for more information.

“CC” Commercial Modules

Item	Description	List Price	Weight		Horizontal Travel	9 3/8 Bolt Spaces
CC8544	C-Series Wide Stair Platform, includes ASG100	$1,960.00	232	lbs	37 1/2”	4
CC3544L	C-Series Long Stair Platform, includes ASG100	$1,436.00	191	lbs	37 1/2”	4
CC3544S	C-Series Short Stair Platform, includes ASG100	$1,362.00	175	lbs	28 1/8”	3
CC8644	C-Series Wide Intermediate Platform	$1,689.00	206	lbs	37 1/2”	4
CC3644L	C-Series Long Intermediate Platform	$999.00	137	lbs	37 1/2”	4
CC3644S	C-Series Short Intermediate Platform	$926.00	126	lbs	28 1/8”	3
CC3944L	C-Series Long End Platform	$981.00	155	lbs	37 1/2”	4
CC3944S	C-Series Short End Platform	$908.00	143	lbs	28 1/8”	3
CC4400	C-Series 5 Step Sidewall Stair Section	$900.00	145	lbs	46 7/8”	5
CC3200	C-Series 4 Step Sidewall Stair Section, 32” Sheet	$774.00	118	lbs	37 1/2”	4
CC4404	C-Series 4 Step Sidewall Stair Section	$774.00	122	lbs	37 1/2”	4
CC4403	C-Series 3 Step Sidewall Stair Section	$646.00	102	lbs	28 1/8”	3
CC4402	C-Series 2 Step Sidewall Stair Section	$550.00	86	lbs	18 3/4”	2
CC4401	C-Series 1 Step Sidewall Stair Section	$144.00	22	lbs	9 3/8”	1
CC3850	C-Series Platform Filler	$127.00	20	lbs	18 3/4”	2
CC3748	C-Series Commercial Crossover Platform - figure on pg. 21	$752.00	85	lbs		
ASG300	A-Series Sidewall Gate, Yellow - figure on pg. 17	$435.00	38	lbs		

“CF” Farm Modules

Item	Description	List Price	Weight		Horizontal Travel	9 3/8 Bolt Spaces
CF8544	C-Series Wide Stair Platform	$1,302.00	186	lbs	37 1/2”	4
CF3544L	C-Series Long Stair Platform	$952.00	144	lbs	37 1/2”	4
CF3544S	C-Series Short Stair Platform	$882.00	134	lbs	28 1/8”	3
CF3644L	C-Series Long Intermediate Platform	$895.00	132	lbs	37 1/2”	4
CF3644S	C-Series Short Intermediate Platform	$826.00	122	lbs	28 1/8”	3
CF3944L	C-Series Long End Platform	$934.00	155	lbs	37 1/2”	4
CF3944S	C-Series Short End Platform	$864.00	143	lbs	28 1/8”	3
CF4400	C-Series 5 Step Sidewall Stair Section	$699.00	118	lbs	46 7/8”	5
CF3200	C-Series 4 Step Sidewall Stair Section, 32” Sheet	$596.00	95	lbs	37 1/2”	4
CF4404	C-Series 4 Step Sidewall Stair Section	$596.00	98	lbs	37 1/2”	4
CF4403	C-Series 3 Step Sidewall Stair Section	$490.00	81	lbs	28 1/8”	3
CF4402	C-Series 2 Step Sidewall Stair Section	$399.00	66	lbs	18 3/4”	2
CF4401	C-Series 1 Step Sidewall Stair Section	$112.00	19	lbs	9 3/8”	1
CC3850	C-Series Platform Filler	$127.00	20	lbs	18 3/4”	2
CC3748	C-Series Commercial Crossover Platform - figure on pg. 21	$752.00	85	lbs		
CF0001	C-Series Inside Handrail Kit, 1 per stair section	$85.00	12	lbs		
CF0002	C-Series Guardrail Kit, 1 per stair section	$56.00	10	lbs		
ASG300	A-Series Sidewall Gate, Yellow - figure on pg. 17	$435.00	38	lbs		

C-Series Sidewall Stairs
44” Bin Sheets with 4” corrugation

With 12-9.375” or 24-4.688” bolt spacing

Ordering Information: *Last two digits of package number indicates number of rings*

CC Commercial Duty Packages
Rest Landings every 6 rings

	List Price	Weight	Bolt Space Coverage
CC401	$4,435.00	562	14
CC404	$7,135.00	997	29
CC405	$8,035.00	1,142	34
CC406	$8,935.00	1,287	39
CC407	$10,635.00	1,535	46
CC408	$11,535.00	1,680	51
CC409	$12,435.00	1,825	56
CC410	$13,335.00	1,970	61
CC411	$14,235.00	2,115	66
CC412	$15,135.00	2,260	71
CC413	$16,835.00	2,508	78
CC414	$17,735.00	2,653	83
CC415	$18,635.00	2,798	88
CC416	$19,535.00	2,943	93
CC417	$20,435.00	3,088	98
CC418	$21,335.00	3,233	103
CC419	$23,035.00	3,481	110
CC420	$23,935.00	3,626	115
CC421	$24,835.00	3,771	120
CC422	$25,735.00	3,916	125
CC423	$26,635.00	4,061	130
CC424	$27,535.00	4,206	135
CC425	$29,235.00	4,454	142
CC426	$30,135.00	4,599	147
CC427	$31,035.00	4,744	152
CC428	$31,935.00	4,889	157
CC429	$32,835.00	5,034	162
CC430	$33,735.00	5,179	167
CC431	$35,435.00	5,427	174
CC432	$36,335.00	5,572	179
CC433	$37,235.00	5,717	184
CC434	$38,135.00	5,862	189

CF Farm Duty Packages
No Rest Landings
No inside rail or guardrail

	List Price	Weight	Bolt Spaces
CF404	$3,645.00	596	25
CF405	$4,344.00	714	30
CF406	$5,043.00	832	35
CF407	$5,742.00	950	40
CF408	$6,441.00	1068	45
CF409	$7,140.00	1186	50
CF410	$7,839.00	1304	55
CF411	$8,538.00	1422	60
CF412	$9,237.00	1540	65
CF413	$9,936.00	1658	70
CF414	$10,635.00	1776	75
CF415	$11,334.00	1894	80
CF416	$12,033.00	2012	85
CF417	$12,732.00	2130	90
CF418	$13,431.00	2248	95
CF419	$14,130.00	2366	100
CF420	$14,829.00	2484	105
CF421	$15,528.00	2602	110
CF422	$16,227.00	2720	115
CF423	$16,926.00	2838	120
CF424	$17,625.00	2956	125
CF425	$18,324.00	3074	130
CF426	$19,023.00	3192	135
CF427	$19,722.00	3310	140
CF428	$20,421.00	3428	145
CF429	$21,120.00	3546	150
CF430	$21,819.00	3664	155
CF431	$22,518.00	3782	160
CF432	$23,217.00	3900	165
CF433	$23,916.00	4018	170
CF434	$24,615.00	4136	175

CF Farm Duty Packages for Roof Stairs
No Rest Landings or inside/guard railings
Wide Platform sits 4.4” above the eave

	List Price	Weight	Bolt Spaces
CF404R	$4,098.00	658	26
CF405R	$4,797.00	776	31
CF406R	$5,496.00	894	36
CF407R	$6,195.00	1012	41
CF408R	$6,894.00	1130	46
CF409R	$7,593.00	1248	51
CF410R	$8,292.00	1366	56
CF411R	$8,991.00	1484	61
CF412R	$9,690.00	1602	66
CF413R	$10,389.00	1720	71
CF414R	$11,088.00	1838	76
CF415R	$11,787.00	1956	81
CF416R	$12,486.00	2074	86
CF417R	$13,185.00	2192	91
CF418R	$13,884.00	2310	96
CF419R	$14,583.00	2428	101
CF420R	$15,282.00	2546	106
CF421R	$15,981.00	2664	111
CF422R	$16,680.00	2782	116
CF423R	$17,379.00	2900	121
CF424R	$18,078.00	3018	126
CF425R	$18,777.00	3136	131
CF426R	$19,476.00	3254	136
CF427R	$20,175.00	3372	141
CF428R	$20,874.00	3490	146
CF429R	$21,573.00	3608	151
CF430R	$22,272.00	3726	156
CF431R	$22,971.00	3844	161
CF432R	$23,670.00	3962	166
CF433R	$24,369.00	4080	171
CF434R	$25,068.00	4198	176

C-Series Sidewall Stairs
Chief 42” Bin Sheets with 4.714” corrugation

With 12-9.719” or 24-4.86” bolt spacing

Ordering Information: *Last two digits of package number indicates number of rings*

CC Commercial Duty Packages
Rest Landings every 6 rings

	List Price	Weight	Bolt Spaces
CC201	$4,435.00	561	14
CC204	$7,135.00	990	29
CC205	$8,035.00	1133	34
CC206	$8,935.00	1276	39
CC207	$10,635.00	1397	46
CC208	$11,535.00	1540	51
CC209	$12,435.00	1683	56
CC210	$13,335.00	1826	61
CC211	$14,235.00	1969	66
CC212	$15,135.00	2112	71
CC213	$16,835.00	2233	78
CC214	$17,735.00	2376	83
CC215	$18,635.00	2519	88
CC216	$19,535.00	2662	93
CC217	$20,435.00	2805	98
CC218	$21,335.00	2948	103
CC219	$23,035.00	3069	110
CC220	$23,935.00	3212	115
CC221	$24,835.00	3355	120
CC222	$25,735.00	3498	125
CC223	$26,635.00	3641	130
CC224	$27,535.00	3784	135
CC225	$29,235.00	3905	142
CC226	$30,135.00	4048	147
CC227	$31,035.00	4191	152
CC228	$31,935.00	4334	157
CC229	$32,835.00	4477	162
CC230	$33,735.00	4620	167
CC231	$35,435.00	4741	172
CC232	$36,335.00	4884	179
CC233	$37,235.00	5027	184
CC234	$38,135.00	5170	189

CF Farm Duty Packages
No Rest Landings
No inside rail or guardrail

	List Price	Weight	Bolt Spaces
CF204	$3,645.00	590	25
CF205	$4,344.00	707	30
CF206	$5,043.00	824	35
CF207	$5,742.00	941	40
CF208	$6,441.00	1058	45
CF209	$7,140.00	1175	50
CF210	$7,839.00	1292	55
CF211	$8,538.00	1409	60
CF212	$9,237.00	1526	65
CF213	$9,936.00	1643	70
CF214	$10,635.00	1760	75
CF215	$11,334.00	1877	80
CF216	$12,033.00	1994	85
CF217	$12,732.00	2111	90
CF218	$13,431.00	2228	95
CF219	$14,130.00	2345	100
CF220	$14,829.00	2462	105
CF221	$15,528.00	2579	110
CF222	$16,227.00	2696	115
CF223	$16,926.00	2813	120
CF224	$17,625.00	2930	125
CF225	$18,324.00	3047	130
CF226	$19,023.00	3164	135
CF227	$19,722.00	3281	140
CF228	$20,421.00	3398	145
CF229	$21,120.00	3515	150
CF230	$21,819.00	3632	155
CF231	$22,518.00	3749	160
CF232	$23,217.00	3866	165
CF233	$23,916.00	3983	170
CF234	$24,615.00	4100	175

CF Farm Duty Packages for Roof Stairs
No Rest Landings or inside/guard railings
Wide Platform sits 4.4” above the eave

	List Price	Weight	Bolt Spaces
CF204R	$4,098.00	610	26
CF205R	$4,797.00	727	31
CF206R	$5,496.00	844	36
CF207R	$6,195.00	961	41
CF208R	$6,894.00	1078	46
CF209R	$7,593.00	1195	51
CF210R	$8,292.00	1312	56
CF211R	$8,991.00	1429	61
CF212R	$9,690.00	1546	66
CF213R	$10,389.00	1663	71
CF214R	$11,088.00	1780	76
CF215R	$11,787.00	1897	81
CF216R	$12,486.00	2014	86
CF217R	$13,185.00	2131	91
CF218R	$13,884.00	2248	96
CF219R	$14,583.00	2365	101
CF220R	$15,282.00	2482	106
CF221R	$15,981.00	2599	111
CF222R	$16,680.00	2716	116
CF223R	$17,379.00	2833	121
CF224R	$18,078.00	2950	126
CF225R	$18,777.00	3067	131
CF226R	$19,476.00	3184	136
CF227R	$20,175.00	3301	141
CF228R	$20,874.00	3418	146
CF229R	$21,573.00	3535	151
CF230R	$22,272.00	3652	156
CF231R	$22,971.00	3769	161
CF232R	$23,670.00	3886	166
CF233R	$24,369.00	4003	171
CF234R	$25,068.00	4120	176

C-Series Sidewall Stairs
42” Bin Sheets with 2.66” corrugation

With 12-9.375” or 24-4.688” bolt spacing

Ordering Information: *Last two digits of package number indicates number of rings*

CC Commercial Duty Packages
Rest Landings every 6 rings

	List Price	Weight	Bolt Spaces
CC601	$4,435.00	562	14
CC604	$7,135.00	988	29
CC605	$8,035.00	1130	34
CC606	$8,935.00	1272	39
CC607	$10,635.00	1520	46
CC608	$11,535.00	1662	51
CC609	$12,435.00	1804	56
CC610	$13,335.00	1946	61
CC611	$14,235.00	2088	66
CC612	$15,135.00	2230	71
CC613	$16,835.00	2478	78
CC614	$17,735.00	2620	83
CC615	$18,635.00	2762	88
CC616	$19,535.00	2904	93
CC617	$20,435.00	3046	98
CC618	$21,335.00	3188	103
CC619	$23,035.00	3436	110
CC620	$23,935.00	3578	115
CC621	$24,835.00	3720	120
CC622	$25,735.00	3862	125
CC623	$26,635.00	4004	130
CC624	$27,535.00	4146	135
CC625	$29,235.00	4394	142
CC626	$30,135.00	4536	147
CC627	$31,035.00	4678	152
CC628	$31,935.00	4820	157
CC629	$32,835.00	4962	162
CC630	$33,735.00	5104	167
CC631	$35,435.00	5352	172
CC632	$36,335.00	5494	179
CC633	$37,235.00	5636	184
CC634	$38,135.00	5778	189

CF Farm Duty Packages
No Rest Landings
No inside rail or guardrail

	List Price	Weight	Bolt Spaces
CF604	$3,645.00	578	25
CF605	$4,344.00	690	30
CF606	$5,043.00	802	35
CF607	$5,742.00	914	40
CF608	$6,441.00	1026	45
CF609	$7,140.00	1138	50
CF610	$7,839.00	1250	55
CF611	$8,538.00	1362	60
CF612	$9,237.00	1474	65
CF613	$9,936.00	1586	70
CF614	$10,635.00	1698	75
CF615	$11,334.00	1810	80
CF616	$12,033.00	1922	85
CF617	$12,732.00	2034	90
CF618	$13,431.00	2146	95
CF619	$14,130.00	2258	100
CF620	$14,829.00	2370	105
CF621	$15,528.00	2482	110
CF622	$16,227.00	2594	115
CF623	$16,926.00	2706	120
CF624	$17,625.00	2818	125
CF625	$18,324.00	2930	130
CF626	$19,023.00	3042	135
CF627	$19,722.00	3154	140
CF628	$20,421.00	3266	145
CF629	$21,120.00	3378	150
CF630	$21,819.00	3490	155
CF631	$22,518.00	3602	160
CF632	$23,217.00	3714	165
CF633	$23,916.00	3826	170
CF634	$24,615.00	3938	175

CF Farm Duty Packages for Roof Stairs
No Rest Landings or inside/guard railings
Wide Platform sits 4.4” above the eave

	List Price	Weight	Bolt Spaces
CF604R	$4,098.00	594	26
CF605R	$4,797.00	706	31
CF606R	$5,496.00	818	36
CF607R	$6,195.00	930	41
CF608R	$6,894.00	1042	46
CF609R	$7,593.00	1154	51
CF610R	$8,292.00	1266	56
CF611R	$8,991.00	1378	61
CF612R	$9,690.00	1490	66
CF613R	$10,389.00	1602	71
CF614R	$11,088.00	1714	76
CF615R	$11,787.00	1826	81
CF616R	$12,486.00	1938	86
CF617R	$13,185.00	2050	91
CF618R	$13,884.00	2162	96
CF619R	$14,583.00	2274	101
CF620R	$15,282.00	2386	106
CF621R	$15,981.00	2498	111
CF622R	$16,680.00	2610	116
CF623R	$17,379.00	2722	121
CF624R	$18,078.00	2834	126
CF625R	$18,777.00	2946	131
CF626R	$19,476.00	3058	136
CF627R	$20,175.00	3170	141
CF628R	$20,874.00	3282	146
CF629R	$21,573.00	3394	151
CF630R	$22,272.00	3506	156
CF631R	$22,971.00	3618	161
CF632R	$23,670.00	3730	166
CF633R	$24,369.00	3842	171
CF634R	$25,068.00	3954	176

C-Series Sidewall Stairs
Behlen 1M Bin Sheets with 3.28” corrugation

With 30-4.123” bolt spacing

Ordering Information: *Last two digits of package number indicates number of rings*

CC Commercial Duty Packages
Rest Landings every 6 rings

	List Price	Weight	Bolt Spaces
CC901	$4,435.00	562	31
CC904	$7,135.00	991	67
CC905	$8,035.00	1134	79
CC906	$8,935.00	1277	91
CC907	$10,635.00	1521	107
CC908	$11,535.00	1664	119
CC909	$12,435.00	1807	131
CC910	$13,335.00	1950	143
CC911	$14,235.00	2093	155
CC912	$15,135.00	2236	167
CC913	$16,835.00	2480	183
CC914	$17,735.00	2623	195
CC915	$18,635.00	2766	207
CC916	$19,535.00	2909	219
CC917	$20,435.00	3052	231
CC918	$21,335.00	3195	243
CC919	$23,035.00	3439	259
CC920	$23,935.00	3582	271
CC921	$24,835.00	3725	283
CC922	$25,735.00	3868	295
CC923	$26,635.00	4011	307
CC924	$27,535.00	4154	319
CC925	$29,235.00	4398	335
CC926	$30,135.00	4541	347
CC927	$31,035.00	4684	359
CC928	$31,935.00	4827	371
CC929	$32,835.00	4970	383
CC930	$33,735.00	5113	395
CC931	$35,435.00	5357	407
CC932	$36,335.00	5500	423
CC933	$37,235.00	5643	435
CC934	$38,135.00	5786	447

CF Farm Duty Packages
No Rest Landings
No inside rail or guardrail

	List Price	Weight	Bolt Spaces
CF904	$3,645.00	585	58
CF905	$4,344.00	702	70
CF906	$5,043.00	819	82
CF907	$5,742.00	936	94
CF908	$6,441.00	1053	106
CF909	$7,140.00	1170	118
CF910	$7,839.00	1287	130
CF911	$8,538.00	1404	142
CF912	$9,237.00	1521	154
CF913	$9,936.00	1638	166
CF914	$10,635.00	1755	178
CF915	$11,334.00	1872	190
CF916	$12,033.00	1989	202
CF917	$12,732.00	2106	214
CF918	$13,431.00	2223	226
CF919	$14,130.00	2340	238
CF920	$14,829.00	2457	250
CF921	$15,528.00	2574	262
CF922	$16,227.00	2691	274
CF923	$16,926.00	2808	286
CF924	$17,625.00	2925	298
CF925	$18,324.00	3042	310
CF926	$19,023.00	3159	322
CF927	$19,722.00	3276	334
CF928	$20,421.00	3393	346
CF929	$21,120.00	3510	358
CF930	$21,819.00	3627	370
CF931	$22,518.00	3744	382
CF932	$23,217.00	3861	394
CF933	$23,916.00	3978	406
CF934	$24,615.00	4095	418

CF Farm Duty Packages for Roof Stairs
No Rest Landings or inside/guard railings
Wide Platform sits 4.4” above the eave

	List Price	Weight	Bolt Spaces
CF904R	$4,098.00	605	60
CF905R	$4,797.00	722	72
CF906R	$5,496.00	839	84
CF907R	$6,195.00	956	96
CF908R	$6,894.00	1073	108
CF909R	$7,593.00	1190	120
CF910R	$8,292.00	1307	132
CF911R	$8,991.00	1424	144
CF912R	$9,690.00	1541	156
CF913R	$10,389.00	1658	168
CF914R	$11,088.00	1775	180
CF915R	$11,787.00	1892	192
CF916R	$12,486.00	2009	204
CF917R	$13,185.00	2126	216
CF918R	$13,884.00	2243	228
CF919R	$14,583.00	2360	240
CF920R	$15,282.00	2477	252
CF921R	$15,981.00	2594	264
CF922R	$16,680.00	2711	276
CF923R	$17,379.00	2828	288
CF924R	$18,078.00	2945	300
CF925R	$18,777.00	3062	312
CF926R	$19,476.00	3179	324
CF927R	$20,175.00	3296	336
CF928R	$20,874.00	3413	348
CF929R	$21,573.00	3530	360
CF930R	$22,272.00	3647	372
CF931R	$22,971.00	3764	384
CF932R	$23,670.00	3881	396
CF933R	$24,369.00	3998	408
CF934R	$25,068.00	4115	420

C-Series Sidewall Stairs
32” Bin Sheets with 2.66” corrugation

With 12-9.375” or 24-4.688” bolt spacing

Ordering Information: *Last two digits of package number indicates number of rings*

CC Commercial Duty Packages
Rest Landings every 6 rings

	List Price	Weight	Bolt Spaces
CC301	$4,316.00	543	13
CC304	$6,638.00	897	25
CC305	$7,412.00	1,015	29
CC306	$8,186.00	1,133	33
CC307	$9,727.00	1,353	39
CC308	$10,501.00	1,471	43
CC309	$11,275.00	1,589	47
CC310	$12,049.00	1,707	51
CC311	$12,823.00	1,825	55
CC312	$13,597.00	1,943	59
CC313	$15,138.00	2,163	65
CC314	$15,912.00	2,281	69
CC315	$16,686.00	2,399	73
CC316	$17,460.00	2,517	77
CC317	$18,234.00	2,635	81
CC318	$19,008.00	2,753	85
CC319	$20,549.00	2,973	91
CC320	$21,323.00	3,091	95
CC321	$22,097.00	3,209	99
CC322	$22,871.00	3,327	103
CC323	$23,645.00	3,445	107
CC324	$24,419.00	3,563	111
CC325	$25,960.00	3,783	117
CC326	$26,734.00	3,901	121
CC327	$27,508.00	4,019	125
CC328	$28,282.00	4,137	129
CC329	$29,056.00	4,255	133
CC330	$29,830.00	4,373	137
CC331	$31,371.00	4,593	143
CC332	$32,145.00	4,711	147
CC333	$32,919.00	4,829	151
CC334	$33,693.00	4,947	155
CC335	$34,467.00	5,093	160
CC336	$35,241.00	5,228	164
CC337	$36,782.00	5,363	168
CC338	$37,556.00	5,499	173
CC339	$38,330.00	5,634	177
CC340	$39,104.00	5,769	181

CF Farm Duty Packages
No Rest Landings
No inside rail or guardrail

	List Price	Weight	Bolt Spaces
CF304	$3,230.00	502	21
CF305	$3,826.00	597	25
CF306	$4,422.00	692	29
CF307	$5,018.00	787	33
CF308	$5,614.00	882	37
CF309	$6,210.00	977	41
CF310	$6,806.00	1072	45
CF311	$7,402.00	1167	49
CF312	$7,998.00	1262	53
CF313	$8,594.00	1357	57
CF314	$9,190.00	1452	61
CF315	$9,786.00	1547	65
CF316	$10,382.00	1642	69
CF317	$10,978.00	1737	73
CF318	$11,574.00	1832	77
CF319	$12,170.00	1927	81
CF320	$12,766.00	2022	85
CF321	$13,362.00	2117	89
CF322	$13,419.00	2212	93
CF323	$13,958.00	2307	97
CF324	$14,554.00	2402	101
CF325	$15,746.00	2497	105
CF326	$16,342.00	2592	109
CF327	$16,938.00	2687	113
CF328	$17,534.00	2782	117
CF329	$18,130.00	2877	121
CF330	$18,726.00	2972	125
CF331	$19,322.00	3067	129
CF332	$19,918.00	3162	133
CF333	$20,514.00	3257	137
CF334	$21,110.00	3352	141
CF335	$21,706.00	3447	145
CF336	$22,302.00	3542	149
CF337	$22,898.00	3637	153
CF338	$23,494.00	3732	157
CF339	$24,090.00	3827	161
CF340	$24,686.00	3922	165

CF Farm Duty Packages
No Rest Landings
No inside rail or guardrail

	List Price	Weight	Bolt Spaces
CF304R	$3,336.00	519	22
CF305R	$3,932.00	614	26
CF306R	$4,528.00	709	30
CF307R	$5,124.00	804	34
CF308R	$5,720.00	899	38
CF309R	$6,316.00	994	42
CF310R	$6,912.00	1089	46
CF311R	$7,508.00	1184	50
CF312R	$8,104.00	1279	54
CF313R	$8,700.00	1374	58
CF314R	$9,296.00	1469	62
CF315R	$9,892.00	1564	66
CF316R	$10,488.00	1659	70
CF317R	$11,084.00	1754	74
CF318R	$11,680.00	1849	78
CF319R	$12,276.00	1944	82
CF320R	$12,872.00	2039	86
CF321R	$13,468.00	2134	90
CF322R	$14,064.00	2229	94
CF323R	$14,660.00	2324	98
CF324R	$15,256.00	2419	102
CF325R	$15,852.00	2514	106
CF326R	$16,448.00	2609	110
CF327R	$17,044.00	2704	114
CF328R	$17,640.00	2799	118
CF329R	$18,236.00	2894	122
CF330R	$18,832.00	2989	126
CF331R	$19,428.00	3084	130
CF332R	$20,024.00	3179	134
CF333R	$20,620.00	3274	138
CF334R	$21,216.00	3369	142
CF335R	$21,812.00	3464	146
CF336R	$22,408.00	3559	150
CF337R	$23,004.00	3654	154
CF338R	$23,600.00	3749	158
CF339R	$24,196.00	3844	162
CF340R	$24,792.00	3939	166

Product Line Card Available

A-Series Sidewall Stairs



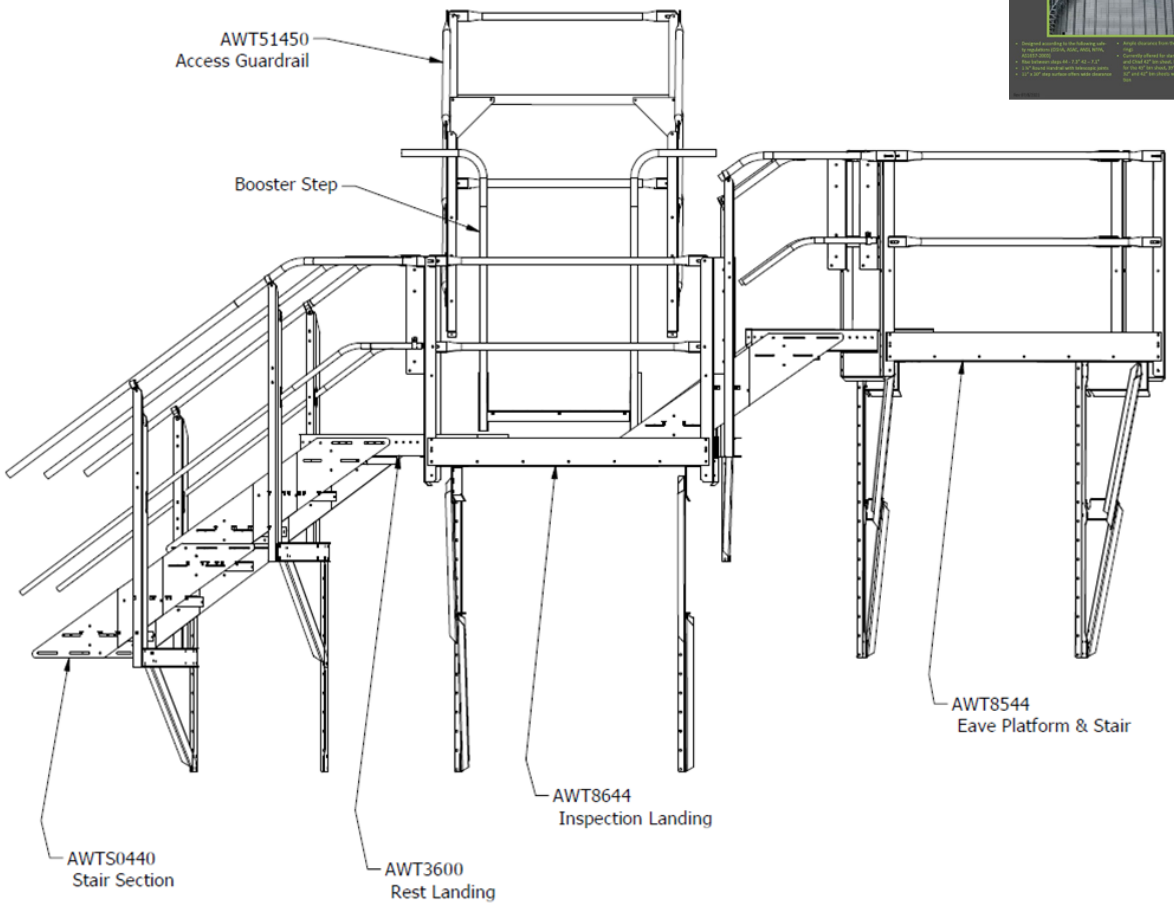

Ordering Information: *The A-Series Sidewall Stairs are offered in 5 different sizes. The individual units are listed below, replace the 44 with the ring height as seen on the following pages. 1 1/2" Round Handrail with Telescopic joints. 11" x 30" step surface offers wide clearance, and ample clearance from the bin wall to the wind rings. Can be used on 33' diameter bins and up. NOTE: Stairs for the stem wall ARE NOT figured into A-Series packages. Call for more information.*

		List		
Item	Description	Price	Weight	
AWTS0440	A-Series Stair Section	$813.00	124	lbs
AWT3600	Stair Rest Landing	$474.00	69	lbs
AWT8644	Inspection Rest Landing	$2,609.00	392	lbs
AWT8544	Eave Platform	$2,609.00	392	lbs
AWT51450	Access Guardrail, Roof Inspection Portal	$645.00	102	lbs
AWTS8844	A-Series Hi Lo Roof Stair Termination Package	$6,678.00	1010	lbs
AWTS8944	A-Series End Platform	$2,609.00	392	lbs
ASG300	A-Series Sidewall Gate, Yellow - figure on pg. 17	$435.00	38	lbs

A-Series Sidewall Stairs
44” Bin Sheets with 4” corrugation

With 12-9.375” or 24-4.688” bolt spacing

Ordering Information: *Last two digits of package number indicates number of rings*

Includes a rest landing every 3 rings or 18 steps.					AWTS0440	AWT8544	AWT8644	AWT3600	AWT51450
				List Price:	$813.00	$2,609.00	$2,609.00	$474.00	$645.00
				Weight:	124	392	392	69	102
Part #	# of Rings	44” ring Eave Height	List Price	Weight					
AWTS402	2	7.3	$5,861.00	888	4	1			
AWTS403	3	11	$7,487.00	1136	6	1			
AWTS404	4	14.7	$9,587.00	1453	8	1		1	
AWTS405	5	18.3	$14,467.00	2195	10	1	1	1	1
AWTS406	6	22	$16,093.00	2443	12	1	1	1	1
AWTS407	7	25.7	$17,719.00	2691	14	1	1	1	1
AWTS408	8	29.3	$19,819.00	3008	16	1	1	2	1
AWTS409	9	33	$21,445.00	3256	18	1	1	2	1
AWTS410	10	36.7	$23,071.00	3504	20	1	1	2	1
AWTS411	11	40.3	$25,171.00	3821	22	1	1	3	1
AWTS412	12	44	$26,797.00	4069	24	1	1	3	1
AWTS413	13	47.7	$28,423.00	4317	26	1	1	3	1
AWTS414	14	51.3	$30,523.00	4634	28	1	1	4	1
AWTS415	15	55	$32,149.00	4882	30	1	1	4	1
AWTS416	16	58.7	$33,775.00	5130	32	1	1	4	1
AWTS417	17	62.3	$35,875.00	5447	34	1	1	5	1
AWTS418	18	66	$37,501.00	5695	36	1	1	5	1
AWTS419	19	69.7	$39,127.00	5943	38	1	1	5	1
AWTS420	20	73.3	$41,227.00	6260	40	1	1	6	1
AWTS421	21	77	$42,853.00	6508	42	1	1	6	1
AWTS422	22	80.7	$44,479.00	6756	44	1	1	6	1
AWTS423	23	84.3	$46,579.00	7073	46	1	1	7	1
AWTS424	24	88	$48,205.00	7321	48	1	1	7	1
AWTS425	25	91.7	$49,831.00	7569	50	1	1	7	1
AWTS426	26	95.3	$51,931.00	7886	52	1	1	8	1
AWTS427	27	99	$53,557.00	8134	54	1	1	8	1
AWTS428	28	102.7	$55,183.00	8382	56	1	1	8	1
AWTS429	29	106.3	$57,283.00	8699	58	1	1	9	1
AWTS430	30	110	$58,909.00	8947	60	1	1	9	1
AWTS431	31	113.7	$60,535.00	9195	62	1	1	9	1
AWTS432	32	117.3	$62,635.00	9512	64	1	1	10	1
AWTS433	33	121	$64,261.00	9760	66	1	1	10	1
AWTS434	34	124.7	$65,887.00	10008	68	1	1	10	1
AWTS435	35	128.3	$67,987.00	10325	70	1	1	11	1

A-Series Sidewall Stairs
Chief 42” Bin Sheets with 4.714” corrugation

With 12-9.719” or 24-4.86” bolt spacing

Ordering Information: *Last two digits of package number indicates number of rings*

Includes a rest landing every 3 rings or 18 steps.					AWTC0420	AWT8542	AWT8642	AWT3600	AWT51450
				List Price:	$813.00	$2,609.00	$2,609.00	$474.00	$645.00
				Weight:	124	392	392	69	102
	# of Rings	42” ring Eave Height	List Price	Weight					
AWTC202	2	7	$5,861.00	888	4	1			
AWTC203	3	10.5	$7,487.00	1136	6	1			
AWTC204	4	14	$9,587.00	1453	8	1		1	
AWTC205	5	17.5	$14,467.00	2195	10	1	1	1	1
AWTC206	6	21	$16,093.00	2443	12	1	1	1	1
AWTC207	7	24.5	$17,719.00	2691	14	1	1	1	1
AWTC208	8	28	$19,819.00	3008	16	1	1	2	1
AWTC209	9	31.5	$21,445.00	3256	18	1	1	2	1
AWTC2010	10	35	$23,071.00	3504	20	1	1	2	1
AWTC2011	11	38.5	$25,171.00	3821	22	1	1	3	1
AWTC2012	12	42	$26,797.00	4069	24	1	1	3	1
AWTC2013	13	45.5	$28,423.00	4317	26	1	1	3	1
AWTC2014	14	49	$30,523.00	4634	28	1	1	4	1
AWTC2015	15	52.5	$32,149.00	4882	30	1	1	4	1
AWTC2016	16	56	$33,775.00	5130	32	1	1	4	1
AWTC2017	17	59.5	$35,875.00	5447	34	1	1	5	1
AWTC2018	18	63	$37,501.00	5695	36	1	1	5	1
AWTC2019	19	66.5	$39,127.00	5943	38	1	1	5	1
AWTC2020	20	77	$41,227.00	6260	40	1	1	6	1
AWTC2021	21	73.5	$42,853.00	6508	42	1	1	6	1
AWTC2022	22	77	$44,479.00	6756	44	1	1	6	1
AWTC2023	23	80.5	$46,579.00	7073	46	1	1	7	1
AWTC2024	24	84	$48,205.00	7321	48	1	1	7	1
AWTC2025	25	87.5	$49,831.00	7569	50	1	1	7	1
AWTC2026	26	91	$51,931.00	7886	52	1	1	8	1
AWTC2027	27	94.5	$53,557.00	8134	54	1	1	8	1
AWTC2028	28	98	$55,183.00	8382	56	1	1	8	1
AWTC2029	29	101.5	$57,283.00	8699	58	1	1	9	1
AWTC2030	30	105	$58,909.00	8947	60	1	1	9	1
AWTC2031	31	108.5	$60,535.00	9195	62	1	1	9	1
AWTC2032	32	112	$62,635.00	9512	64	1	1	10	1
AWTC2033	33	115.5	$64,261.00	9760	66	1	1	10	1
AWTC2034	34	119	$65,887.00	10008	68	1	1	10	1
AWTC2035	35	122.5	$67,987.00	10325	70	1	1	11	1

A-Series Sidewall Stairs
32” Bin Sheets with 2.66” corrugation

With 12-9.375” or 24-4.688” bolt spacing

Ordering Information: *Last two digits of package number indicates number of rings*

Includes a rest landing every 3 rings or 18 steps.					AWTS0320	AWTS0321	AWT8526	AWT8626	AWT3600	AWT51450	
				List Price:	$813.00	$813.00	$2,609.00	$2,609.00	$474.00	$645.00	
				Weight:	121	121	392	392	69	102	
	# of Rings	32” Ring Eave Ht.	List Price	Weight							
AWTS302	2	5.3	$5,048.00	755	3		1				$5,048.00
AWTS303	3	8	$5,861.00	876	3	1	1				$5,861.00
AWTS304	4	10.7	$7,487.00	1118	6		1				$7,487.00
AWTS305	5	13.3	$12,028.00	1802	6	1	1	1	1	1	$12,028.00
AWTS306	6	16	$13,654.00	2044	9		1	1	1	1	$13,654.00
AWTS307	7	18.7	$14,467.00	2165	9	1	1	1	1	1	$14,467.00
AWTS308	8	21.4	$16,093.00	2407	12		1	1	1	1	$16,093.00
AWTS309	9	24	$17,380.00	2597	12	1	1	1	2	1	$17,380.00
AWTS310	10	26.7	$19,006.00	2839	15		1	1	2	1	$19,006.00
AWTS311	11	29.4	$19,819.00	2960	15	1	1	1	2	1	$19,819.00
AWTS312	12	32	$21,445.00	3202	18		1	1	2	1	$21,445.00
AWTS313	13	34.7	$22,732.00	3392	18	1	1	1	3	1	$22,732.00
AWTS314	14	37.4	$24,358.00	3634	21		1	1	3	1	$24,358.00
AWTS315	15	40	$25,171.00	3755	21	1	1	1	3	1	$25,171.00
AWTS316	16	42.7	$26,797.00	3997	24		1	1	3	1	$26,797.00
AWTS317	17	45.4	$28,084.00	4187	24	1	1	1	4	1	$28,084.00
AWTS318	18	48.1	$29,710.00	4429	27		1	1	4	1	$29,710.00
AWTS319	19	50.7	$30,523.00	4550	27	1	1	1	4	1	$30,523.00
AWTS320	20	53.4	$32,149.00	4792	30		1	1	4	1	$32,149.00
AWTS321	21	56.1	$33,436.00	4982	30	1	1	1	5	1	$33,436.00
AWTS322	22	58.7	$35,062.00	5224	33		1	1	5	1	$35,062.00
AWTS323	23	61.4	$35,875.00	5345	33	1	1	1	5	1	$35,875.00
AWTS324	24	64.1	$37,501.00	5587	36		1	1	5	1	$37,501.00
AWTS325	25	66.7	$38,788.00	5777	36	1	1	1	6	1	$38,788.00
AWTS326	26	69.4	$40,414.00	6019	39		1	1	6	1	$40,414.00
AWTS327	27	72.1	$41,227.00	6140	39	1	1	1	6	1	$41,227.00
AWTS328	28	74.8	$42,853.00	6382	42		1	1	6	1	$42,853.00
AWTS329	29	77.4	$44,140.00	6572	42	1	1	1	7	1	$44,140.00
AWTS330	30	80.1	$45,766.00	6814	45		1	1	7	1	$45,766.00
AWTS331	31	82.8	$46,579.00	6935	45	1	1	1	7	1	$46,579.00
AWTS332	32	85.4	$48,205.00	7177	48		1	1	7	1	$48,205.00
AWTS333	33	88.1	$49,492.00	7367	48	1	1	1	8	1	$49,492.00
AWTS334	34	90.8	$51,118.00	7609	51		1	1	8	1	$51,118.00
AWTS335	35	93.4	$51,931.00	7730	51	1	1	1	8	1	$51,931.00

A-Series Sidewall Stairs
Behlen 1M Bin Sheets with 3.28" corrugation

With 30-4.123" bolt spacing

Ordering Information: *Last two digits of package number indicates number of rings*

Includes a rest landing every 3 rings or 18 steps.					AWTM0390	AWTM0391	AWT8539	AWT8639	AWT3600	AWT51450	
				List Price:	$813.00	$813.00	$2,609.00	$2,609.00	$474.00	$645.00	
				Weight:	121	211	392	392	69	102	
	# of Rings	1M Ring Eave Ht.	List Price	Weight							
AWTM902	2	6.6	$5,048.00	755	3		1				$5,048.00
AWTM903	3	9.8	$5,861.00	966	3	1	1				$5,861.00
AWTM904	4	13.1	$7,487.00	1118	6		1				$7,487.00
AWTM905	5	16.4	$12,028.00	1892	6	1	1	1	1	1	$12,028.00
AWTM906	6	19.6	$13,654.00	2044	9		1	1	1	1	$13,654.00
AWTM907	7	22.9	$14,467.00	2255	9	1	1	1	1	1	$14,467.00
AWTM908	8	26.2	$16,093.00	2407	12		1	1	1	1	$16,093.00
AWTM909	9	29.4	$17,380.00	2687	12	1	1	1	2	1	$17,380.00
AWTM910	10	32.7	$19,006.00	2839	15		1	1	2	1	$19,006.00
AWTM911	11	36	$19,819.00	3050	15	1	1	1	2	1	$19,819.00
AWTM912	12	39.3	$21,445.00	3202	18		1	1	2	1	$21,445.00
AWTM913	13	42.5	$22,732.00	3482	18	1	1	1	3	1	$22,732.00
AWTM914	14	45.8	$24,358.00	3634	21		1	1	3	1	$24,358.00
AWTM915	15	49.1	$25,171.00	3845	21	1	1	1	3	1	$25,171.00
AWTM916	16	52.3	$26,797.00	3997	24		1	1	3	1	$26,797.00
AWTM917	17	55.6	$28,084.00	4277	24	1	1	1	4	1	$28,084.00
AWTM918	18	58.9	$29,710.00	4429	27		1	1	4	1	$29,710.00
AWTM919	19	62.1	$30,523.00	4640	27	1	1	1	4	1	$30,523.00
AWTM920	20	65.4	$32,149.00	4792	30		1	1	4	1	$32,149.00
AWTM921	21	68.7	$33,436.00	5072	30	1	1	1	5	1	$33,436.00
AWTM922	22	72	$35,062.00	5224	33		1	1	5	1	$35,062.00
AWTM923	23	75.2	$35,875.00	5435	33	1	1	1	5	1	$35,875.00
AWTM924	24	78.5	$37,501.00	5587	36		1	1	5	1	$37,501.00
AWTM925	25	81.8	$38,788.00	5867	36	1	1	1	6	1	$38,788.00
AWTM926	26	85	$40,414.00	6019	39		1	1	6	1	$40,414.00
AWTM927	27	88.3	$41,227.00	6230	39	1	1	1	6	1	$41,227.00
AWTM928	28	91.6	$42,853.00	6382	42		1	1	6	1	$42,853.00
AWTM929	29	94.8	$44,140.00	6662	42	1	1	1	7	1	$44,140.00
AWTM930	30	98.1	$45,766.00	6814	45		1	1	7	1	$45,766.00
AWTM931	31	101.4	$46,579.00	7025	45	1	1	1	7	1	$46,579.00
AWTM932	32	104.7	$48,205.00	7177	48		1	1	7	1	$48,205.00
AWTM933	33	107.9	$49,492.00	7457	48	1	1	1	8	1	$49,492.00
AWTM934	34	111.2	$51,118.00	7609	51		1	1	8	1	$51,118.00
AWTM935	35	114.5	$51,931.00	7820	51	1	1	1	8	1	$51,931.00

A-Series Sidewall Stairs
42” Bin Sheets with 2.66” corrugation

With 12-9.375” or 24-4.688” bolt spacing

Ordering Information: *Last two digits of package number indicates number of rings*

Includes a rest landing every 3 rings or 18 steps.					AWTS0420	AWT8546	AWT8646	AWT3600	AWT51450
				List Price:	$813.00	$2,609.00	$2,609.00	$474.00	$645.00
				Weight:	124	392	392	69	102
	# of Rings	42” ring Eave Height	List Price	Weight					
AWTS202	2	7	$5,861.00	888	4	1			
AWTS203	3	10.5	$7,487.00	1136	6	1			
AWTS204	4	14	$9,587.00	1453	8	1		1	
AWTS205	5	17.5	$14,467.00	2195	10	1	1	1	1
AWTS206	6	21	$16,093.00	2443	12	1	1	1	1
AWTS207	7	24.5	$17,719.00	2691	14	1	1	1	1
AWTS208	8	28	$19,819.00	3008	16	1	1	2	1
AWTS209	9	31.5	$21,445.00	3256	18	1	1	2	1
AWTS210	10	35	$23,071.00	3504	20	1	1	2	1
AWTS211	11	38.5	$25,171.00	3821	22	1	1	3	1
AWTS212	12	42	$26,797.00	4069	24	1	1	3	1
AWTS213	13	45.5	$28,423.00	4317	26	1	1	3	1
AWTS214	14	49	$30,523.00	4634	28	1	1	4	1
AWTS215	15	52.5	$32,149.00	4882	30	1	1	4	1
AWTS216	16	56	$33,775.00	5130	32	1	1	4	1
AWTS217	17	59.5	$35,875.00	5447	34	1	1	5	1
AWTS218	18	63	$37,501.00	5695	36	1	1	5	1
AWTS219	19	66.5	$39,127.00	5943	38	1	1	5	1
AWTS220	20	77	$41,227.00	6260	40	1	1	6	1
AWTS221	21	73.5	$42,853.00	6508	42	1	1	6	1
AWTS222	22	77	$44,479.00	6756	44	1	1	6	1
AWTS223	23	80.5	$46,579.00	7073	46	1	1	7	1
AWTS224	24	84	$48,205.00	7321	48	1	1	7	1
AWTS225	25	87.5	$49,831.00	7569	50	1	1	7	1
AWTS226	26	91	$51,931.00	7886	52	1	1	8	1
AWTS227	27	94.5	$53,557.00	8134	54	1	1	8	1
AWTS228	28	98	$55,183.00	8382	56	1	1	8	1
AWTS229	29	101.5	$57,283.00	8699	58	1	1	9	1
AWTS230	30	105	$58,909.00	8947	60	1	1	9	1
AWTS231	31	108.5	$60,535.00	9195	62	1	1	9	1
AWTS232	32	112	$62,635.00	9512	64	1	1	10	1
AWTS233	33	115.5	$64,261.00	9760	66	1	1	10	1
AWTS234	34	119	$65,887.00	10008	68	1	1	10	1
AWTS235	35	122.5	$67,987.00	10325	70	1	1	11	1

A-Series Sidewall Stairs

Product Line Card Available

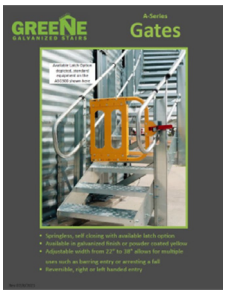



Gate Wall Base

A



Hinge Gate Mount

B

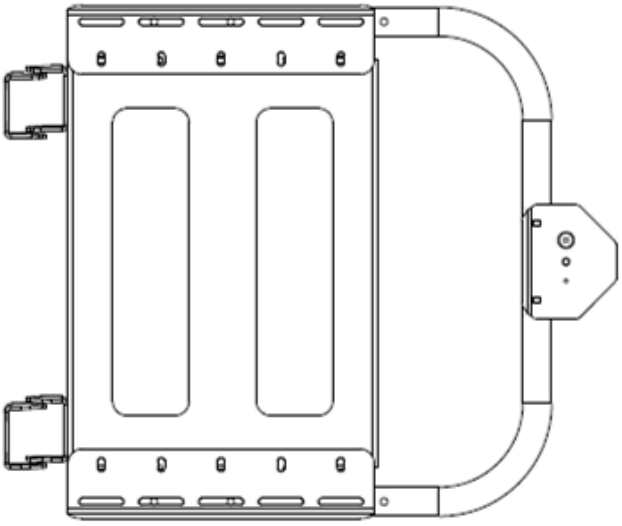

Gate

C

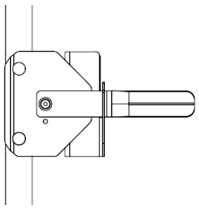

ASG010 Gate Latch

D

Ordering Information: *Springless, self closing with available latch option. Available in galvanized finish or powder coated yellow. Adjustable width from 22” to 38” allows for multiple uses such as barring entry or arresting a fall. Reversible, right or left handed entry.*

Includes	Item	Description	List Price	Weight	
B, C	ASG100	A-Series Self Closing Gate Galvanized	$348.00	38	lbs.
A, B, C, D	ASG150	A-Series Sidewall Gate Galvanized	$435.00	50	lbs.
B, C	ASG200	A-Series Self Closing Gate Yellow	$435.00	38	lbs.
A, B, C, D	ASG250	A-Series Sidewall Gate Yellow	$522.00	50	lbs.
C, D	ASG300	A-Series Sidewall Stair Gate Yellow	$435.00	38	lbs.
A, D	ASG050	Gate Wall Mount and Latch Galvanized	$104.00	12	lbs.
D	ASG010	Gate Latch	$52.00	6	lbs.

Product Line Card Available

Easy Step Sidewall Stairs



Easy Step Sidewall Stairs are being discontinued January 1st, 2028.
EXPECT 12 WEEK LEAD TIME

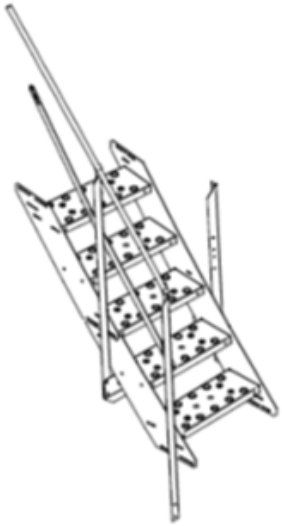

ES4400 Bottom Stair Section

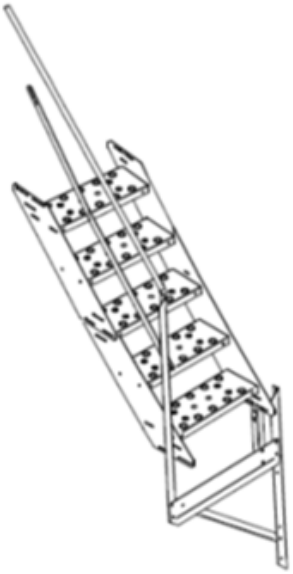

ES4400 Stair Section

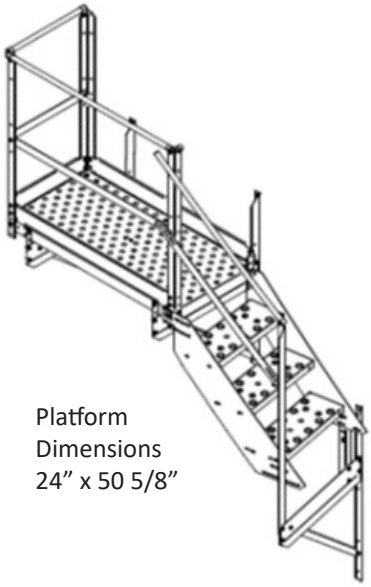

Platform Dimensions 24” x 50 5/8”

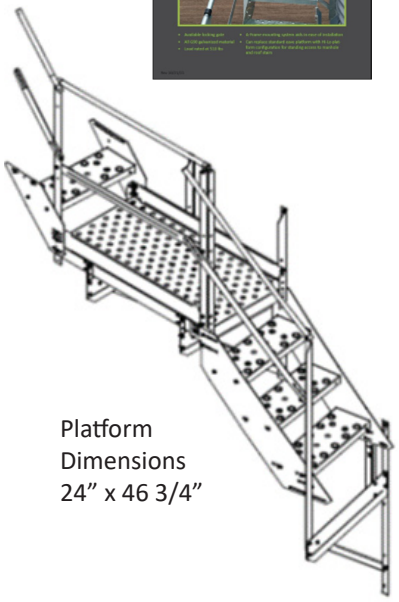

Platform Dimensions 24” x 46 3/4”

Ordering Information:

- *Easy Step stairs feature a 24” wide step that sits 7” from the bin wall.*
- *Easy Step sidewall stairs fit bins from 24’ to 75’ in diameter*
- *For adjacent bins sharing one platform, space bin walls 38” apart, if using a twin platform space 64” apart*
- *For larger spans refer to page 21 for the use of the Easy Step Filler Platform, ES3748*
- *Easy Step Platform sits 12” below the eave*
- *To calculate parts needed, order 1 Stair Platform with Stair Assembly (ES35xx) for the top ring of your bin, and 1 Stair Section for each remaining ring (ESxx00)*
- *To use an Intermediate Platform, substitute an Intermediate Platform and Stair Assembly for 1 Stair Section (ES36xx).*
- *Does not meet OSHA regulation 1910.25(C)(3)*
- *Example: On an 8-ring 44” sheet bin with an Intermediate Platform, use 1-ES3544, 1-ES3644, and 6-ES4400*

		List			Horizontal	Bolt	Ring	Rise per
Item	Description	Price	Weight		Travel	Spaces	Size	Step
ES3200	32” Easy Step Stair Section	$596.00	70	lbs	32 13/16”	3 1/2	32”	8”
ES3900	39” Easy Step Stair Section	$699.00	82	lbs	37 1/8”	9	39”	7.8”
ES4200	42” Easy Step Stair Section	$699.00	82	lbs	38 7/8”	4	42”	8.4”
ES4400	44” Easy Step Stair Section	$699.00	84	lbs	37 1/2”	4	44”	8.8”
ES4500	45” Easy Step Stair Section	$699.00	82	lbs	37 13/16”	4	45”	9”
ASG150	A-Series Sidewall Gate Galvanized	$435.00	38	lbs	See figure on pg. 17			
ASG250	A-Series Sidewall Gate, Yellow	$522.00	38	lbs	for more detailed information.			

Easy Step Platforms

Easy Step Sidewall Stairs are being discontinued January 1st, 2028.
EXPECT 12 WEEK LEAD TIME

Item	Description	List Price	Weight		Horizontal Travel	Bolt Spaces	Ring Size	Rise Per Step
ES3532	32” Easy Step Platform & Stair Assy	$1,442.00	130	lbs	66”	6	32”	8”
ES3539	39” Easy Step Platform & Stair Assy	$1,548.00	146	lbs	68 1/32”	16	39”	7.8”
ES3542	42” Easy Step Platform & Stair Assy	$1,548.00	146	lbs	65 5/8”	7	42”	8.4”
ES3544	44” Easy Step Platform & Stair Assy	$1,548.00	146	lbs	65 5/8”	7	44”	8.8”
ES3545	45” Easy Step Platform & Stair Assy	$1,548.00	146	lbs	66 1/8”	7	45”	9”
ES3632	32” Easy Step Intermediate Platform & Stair Assy	$1,385.00	140	lbs	70 5/16”	7 1/2	32”	8”
ES3639	39” Easy Step Intermediate Platform & Stair Assy	$1,491.00	151	lbs	74 1/4”	18	39”	7.8”
ES3642	42” Easy Step Intermediate Platform & Stair Assy	$1,491.00	151	lbs	77 3/4”	8	42”	8.4”
ES3644	44” Easy Step Intermediate Platform & Stair Assy	$1,491.00	151	lbs	75”	8	44”	8.8”
ES3645	45” Easy Step Intermediate Platform & Stair Assy	$1,491.00	151	lbs	75 19/32”	8	45”	9”
ES3732	32” Easy Step Twin Platform	$934.00	84	lbs	37 1/2”	4	32”	
ES3739	39” Easy Step Twin Platform	$934.00	88	lbs	37 1/8”	9	39”	
ES3742	42” Easy Step Twin Platform	$934.00	88	lbs	38 7/8”	4	42”	
ES3744	44” Easy Step Twin Platform	$934.00	88	lbs	37 1/2”	4	44”	
ES3745	45” Easy Step Twin Platform	$934.00	88	lbs	37 13/16”	4	45”	
ES3832	32” Easy Step Ladder Platform	$934.00	85	lbs	37 1/2”	4	32”	
ES3839	39” Easy Step Ladder Platform	$934.00	89	lbs	37 1/8”	9	39”	
ES3842	42” Easy Step Ladder Platform	$934.00	89	lbs	38 7/8”	4	42”	
ES3844	44” Easy Step Ladder Platform	$934.00	89	lbs	37 1/2”	4	44”	
ES3845	45” Easy Step Ladder Platform	$934.00	89	lbs	37 13/16”	4	45”	
ES3932	32” Easy Step End Platform	$934.00	90	lbs	37 1/2”	4	32”	
ES3939	39” Easy Step End Platform	$934.00	94	lbs	37 1/8”	9	39”	
ES3942	42” Easy Step End Platform	$934.00	94	lbs	38 7/8”	4	42”	
ES3944	44” Easy Step End Platform	$934.00	94	lbs	37 1/2”	4	44”	
ES3945	45” Easy Step End Platform	$934.00	94	lbs	37 13/16”	4	45”	
ES3748	Twin Platform Filler 48”, figure on pg. 21	$752.00	58	lbs	48” x 24”	deck dim.	All	
ES3850	Easy Step Platform Filler	$227.00	15	lbs	18 3/4”	2	All	
4040	Platform Filler Plate (field cut)	$295.76	37	lbs	48” x 40”	deck dim.	All	

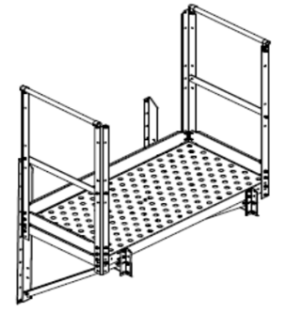

Platform Dimensions 24” x 50 5/8”

ES3700 Series Twin Platform

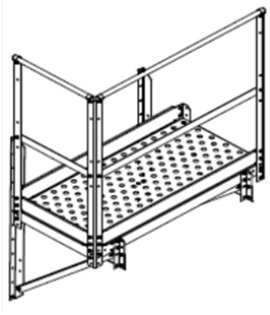

Platform Dimensions 24” x 50 5/8”

ES3800 Series Ladder Platform

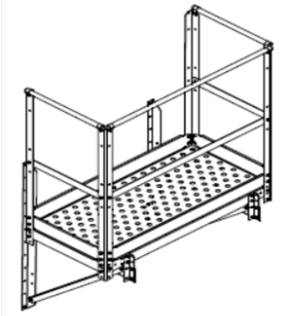

ES3900 Series End Platform

Hi-Lo Roof Stair to Manhole Configuration

Product Line Card Available



For use on bins 36’ in diameter and larger

Easy Step Hi Lo Platforms are being discontinued January 1st, 2028.
EXPECT 12 WEEK LEAD TIME

		List			Horizontal	Bolt	Ring
Item	Description	Price	Weight		Travel	Spaces	Size
ES7442	42” Easy Step Top 4 Step Section	$699.00	84	lbs	38 7/8”	4	42”
ES7444	44” Easy Step Top 4 Step Section	$699.00	84	lbs	37 1/2”	4	44”
ES7744	Transitional Stair Section	$852.00	105	lbs	37 1/2”	4	All
ES8539	39” Easy Step Stair Top High Platform	$1,960.00	208	lbs	37 1/8”	9	39”
ES8542	42” Easy Step Stair Top High Platform	$1,960.00	204	lbs	38 7/8”	4	42”
ES8544	44” Easy Step Stair Top High Platform	$1,960.00	208	lbs	37 1/2”	4	44”
ES8545	45” Easy Step Stair Top High Platform	$1,960.00	208	lbs	37 1/2”	4	45”
ES8850	Platform Filler	$296.00	22	lbs	18 3/4”	2	All

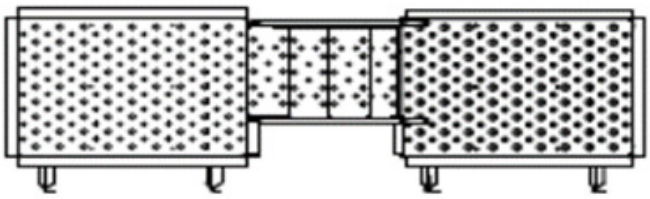

ES7744 is only used as a transitional stair section from Hi to Lo platforms. This configuration is to be utilized by ladder access only.

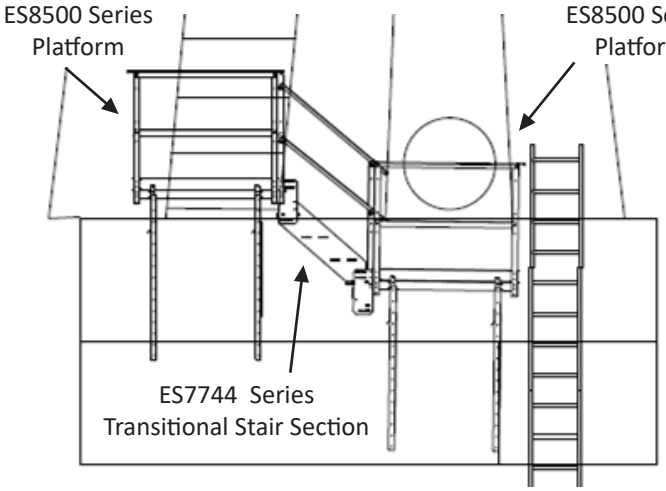

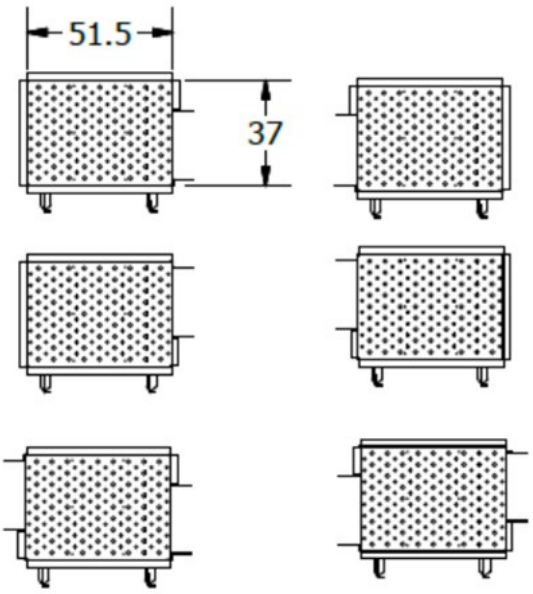

Overhead view of the various entry options

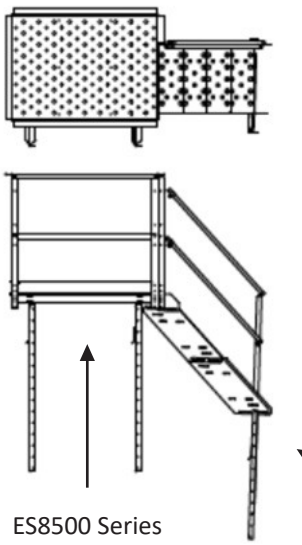

ES744X is used to go from the sidewall stairs to a Hi platform. This sets the platform 4” below the eave.

ES8500 Series
Platform

ES744X Series
Top 4 Step Stair Section

Platform Illustrations

CC3748 Modeled between C-Series Platforms

Maximum Bin Wall Clearance of 8’10”

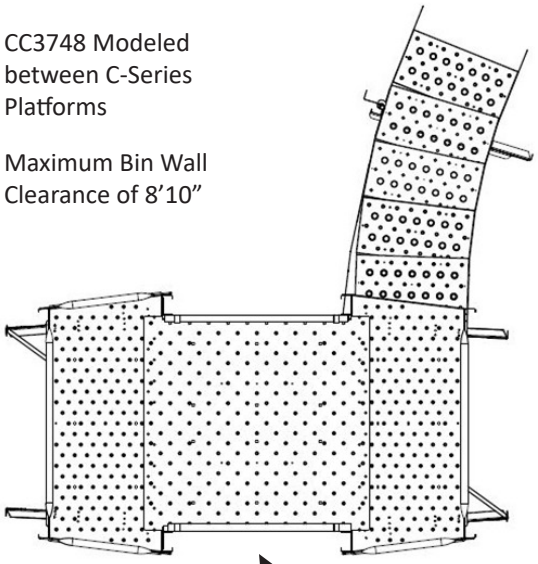

CC3748 Modeled between Easy Step Platforms

Maximum Bin Wall Clearance of 8’6”

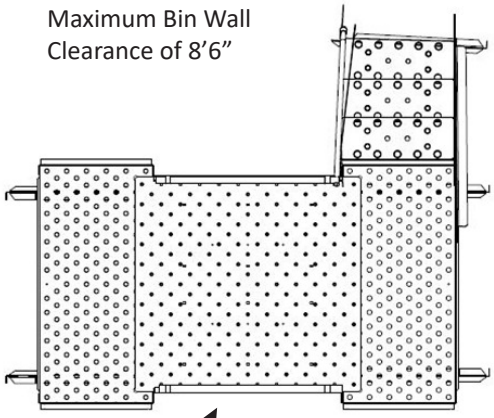

CC3748 Crossover Platform

- *Allows for the joining of two bins by connecting two platforms to form a bridge*
- *Bridge is 46” wide with integrated kickboards providing a 44” walkway*
- *Can facilitate ascending or descending stair access or additional platforms on either bin*
- *Can be used on C-Series or Easy Step Sidewall Stair Platforms*
- *C-Series maximum bin wall to bin wall clearance is 8’10”*
- *Easy Step maximum bin wall to bin wall clearance is 8’6”*
- *See pg. 5 for pricing information*

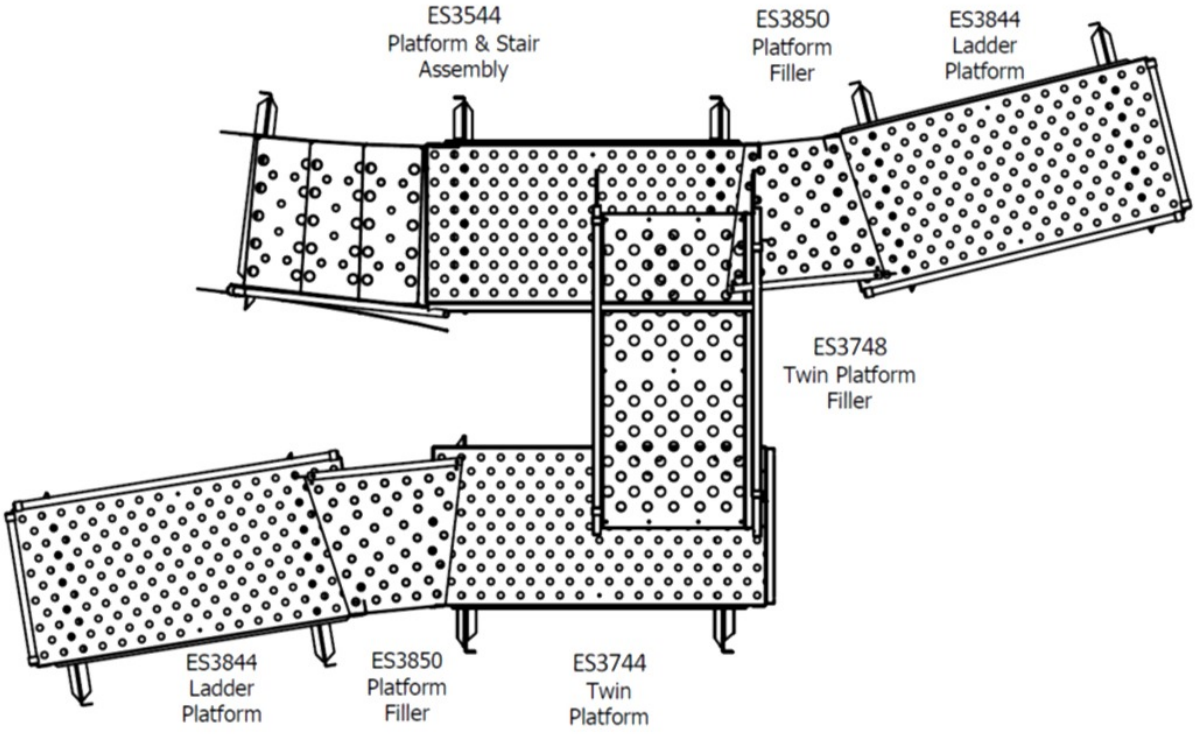

Original Sidewall Stairs

NON STOCKING ITEM • EXPECT 12 WEEK LEAD TIME

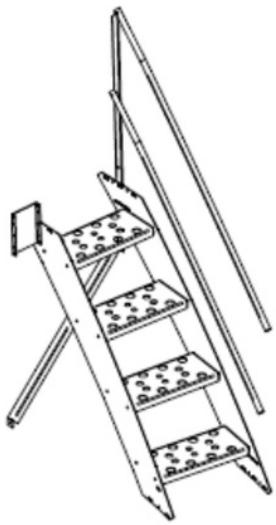

14400 Stair Section

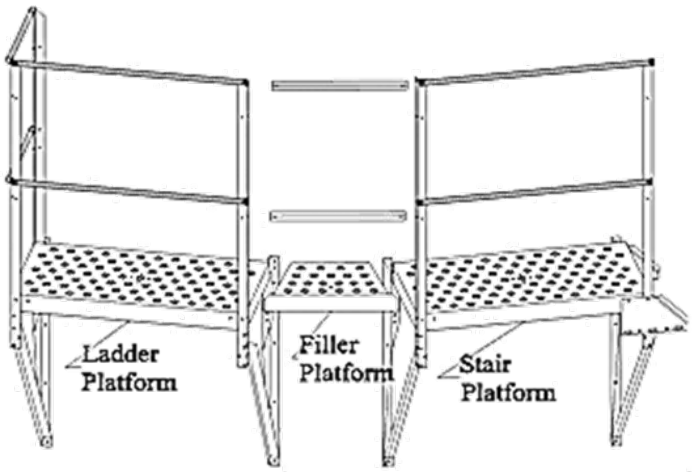

38000 Ladder Platform, 38050 Platform Filler, 35000 Stair Platform

Ordering Information:

- *Original Sidewall Stairs feature a 20" wide step that sits 6" from the bin wall.*
- *Original Sidewall Stair packages fit bins from 18' to 105' diameter and are not for commercial use.*
- *For adjacent bins sharing one platform, space bin walls 32" apart, and 54" if using a twin platform.*
- *On a standard bin, the stair sections used are determined by the height of the sheet. For a 32" bin sheet, use one 13200 per sheet. For the top two rings, the parts needed are determined by the desired location of the platform, using the chart below.*

	TOP TWO RINGS	
Height of rings	*5 ½" below eave*	*16" below eave*
44"	*1-35000 Platform* *1-13200 Section* *1-14400 Section*	*1-35000 Platform* *1-12100 Section* *1-14400 Section*
32"	*1-35000 Platform* *1-12100 Section* *1-13200 Section*	*1-35000 Platform* *1-14400 Section*

Example: For an 8-ring bin with 32" sheets and a platform 16" below eave, use 1-35000 Platform, 1-14400 Stair Section, and 6-13200 Stair Sections.

Item	Description	List Price	Weight		Horizontal Travel	Bolt Spaces
12100	21" Stair Section	$295.00	38	lbs	18 3/4"	2
13200	32" Stair Section	$401.00	51	lbs	28 1/8"	3
14200	42" Stair Section	$538.00	64	lbs	37 1/2"	4
14400	44" Stair Section	$538.00	64	lbs	37 1/2"	4
40000	Booster Step	$121.00	8	lbs		
45000	Door Step	$141.00	10	lbs		

Original Sidewall Platforms

NON STOCKING ITEM • EXPECT 12 WEEK LEAD TIME

Standard
30000 Series

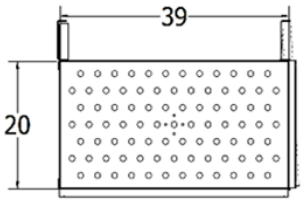

Long
30100 Series

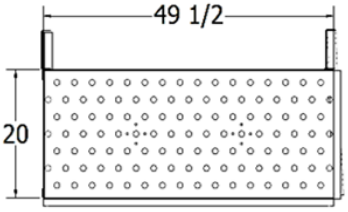

Large
30500 Series

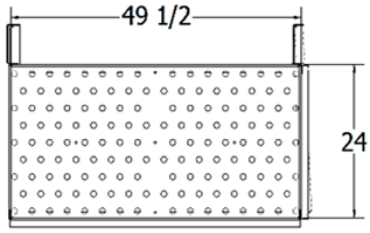

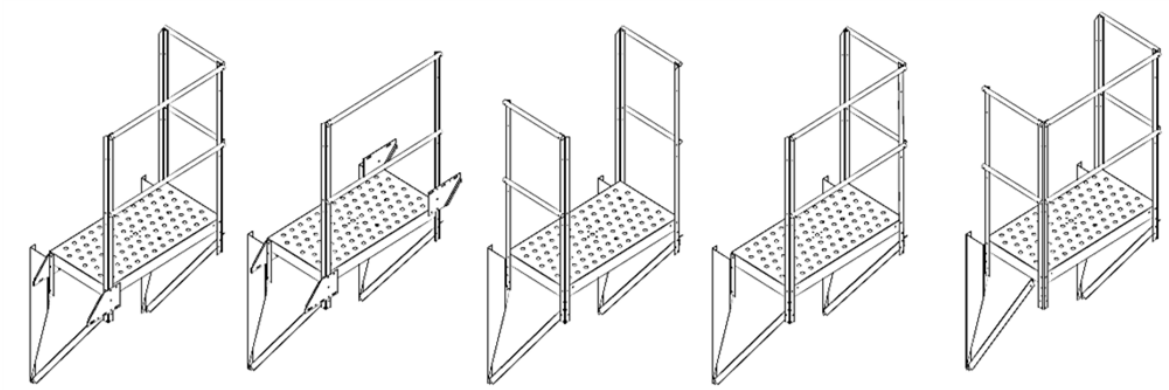

35000 Stair Platform

36000 Intermediate Platform

37000 Twin Platform

38000 Ladder Platform

39000 End Platform

Item	Description	List Price	Weight		Horizontal Travel	Bolt Spaces
35000	Standard Stair Platform	$514.00	64	lbs	37 1/2”	4
35100	Long Stair Platform	$598.00	74	lbs	46 7/8”	5
36000	Standard Intermediate Platform	$447.00	60	lbs	37 1/2”	4
36100	Long Intermediate Platform	$563.00	67	lbs	46 7/8”	5
37000	Standard Twin Platform	$447.00	62	lbs	37 1/2”	4
37100	Long Twin Platform	$563.00	68	lbs	46 7/8”	5
37500	Large Twin Platform	$644.00	84	lbs	46 7/8”	5
38000	Standard Ladder Platform	$447.00	66	lbs	37 1/2”	4
38100	Long Ladder Platform	$563.00	69	lbs	46 7/8”	5
38500	Large Ladder Platform	$644.00	84	lbs	46 7/8”	5
39000	Standard End Platform	$482.00	69	lbs	37 1/2”	4
39100	Long End Platform	$598.00	78	lbs	46 7/8”	5
39500	Large End Platform	$669.00	87	lbs	46 7/8”	5
37048	Twin Platform Filler 48”	$487.00	58	lbs		
38050	Platform Filler	$109.00	10	lbs	9 3/8”	1
35002	Kickboard Kit	$118.00	14	lbs		

Product Line Card Available

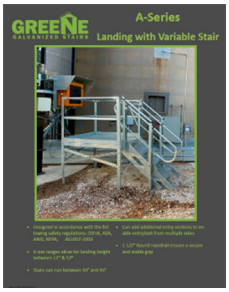

A-Series Landing with Variable Stairs

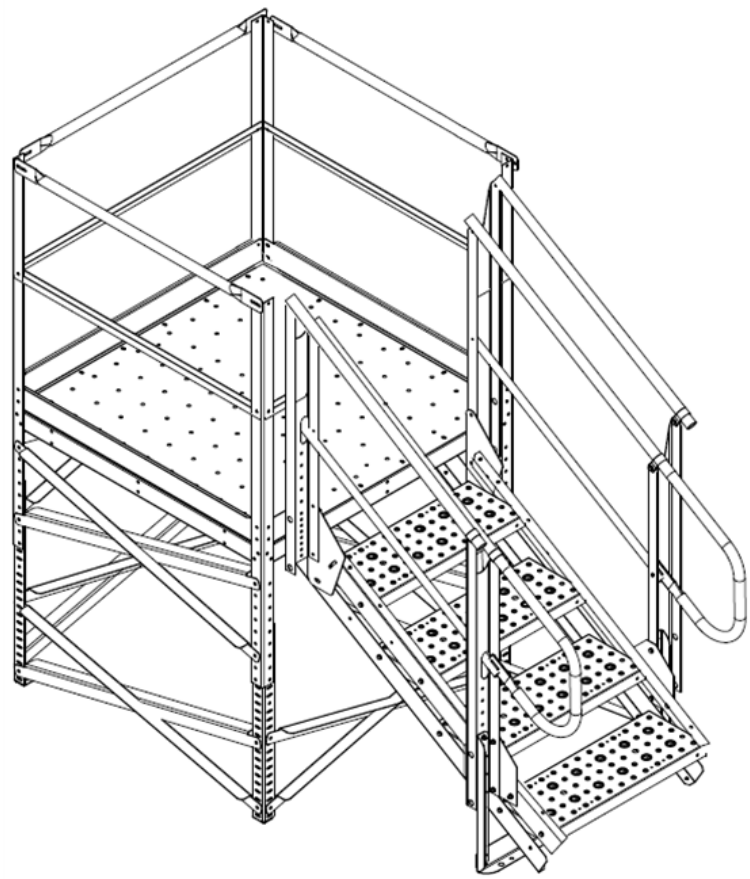

Ordering Information: At a 30° pitch, the step rise is 6.75" and the step run is 11.69". At a 45° pitch the step rise is 9.5" and the step run is 9.5". If needing multiple entries, order (1) AVT0002 and (1) corresponding stair section from page 43 for each additional entry.

For Example: (1) AVT44041 Landing & 4 step
(1) AVT0002 Entry Kit
(1) AVT1604 4 step

Item	Description	List Price	Weight		Height at 30°	Height at 45°
AVT44001	A-Series, 4'x4' Landing	$1,203.00	177	lbs	12"	12"
AVT44011	A-Series, 4'x4' Landing, 1 Step Straight Up Stair Section	$1,685.00	248	lbs	13.5"	19"
AVT44021	A-Series, 4'x4' Landing, 2 Step Straight Up Stair Section	$2,187.00	322	lbs	20.5"	28.5"
AVT44031	A-Series, 4'x4' Landing, 3 Step Straight Up Stair Section	$2,377.00	350	lbs	27"	38"
AVT44041	A-Series, 4'x4' Landing, 4 Step Straight Up Stair Section	$2,840.00	418	lbs	33.75"	47.5"
AVT44051	A-Series, 4'x4' Landing, 5 Step Straight Up Stair Section	$3,030.00	446	lbs	40.5"	57"
AVT0002	Additional A-Series Variable Stair Landing Entry Kit (bottom end rails included)	$252.00	37	lbs		
ASG100	A-Series Self Closing Gate, Galvanized	$348.00	38	lbs		

Product Line Card Available

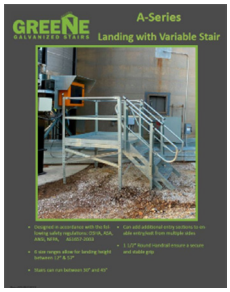

A-Series Truck Probe Service Platform and Stairs

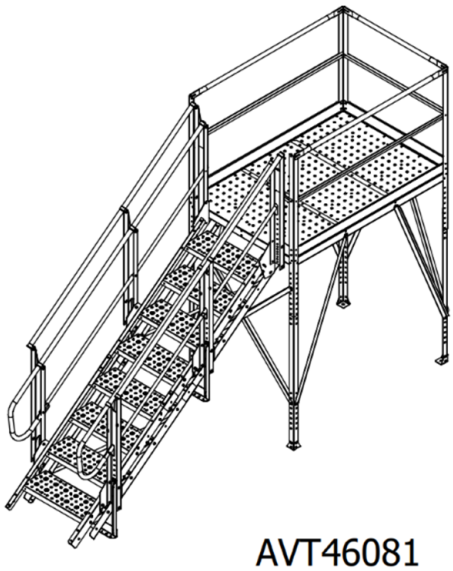

AVT46081

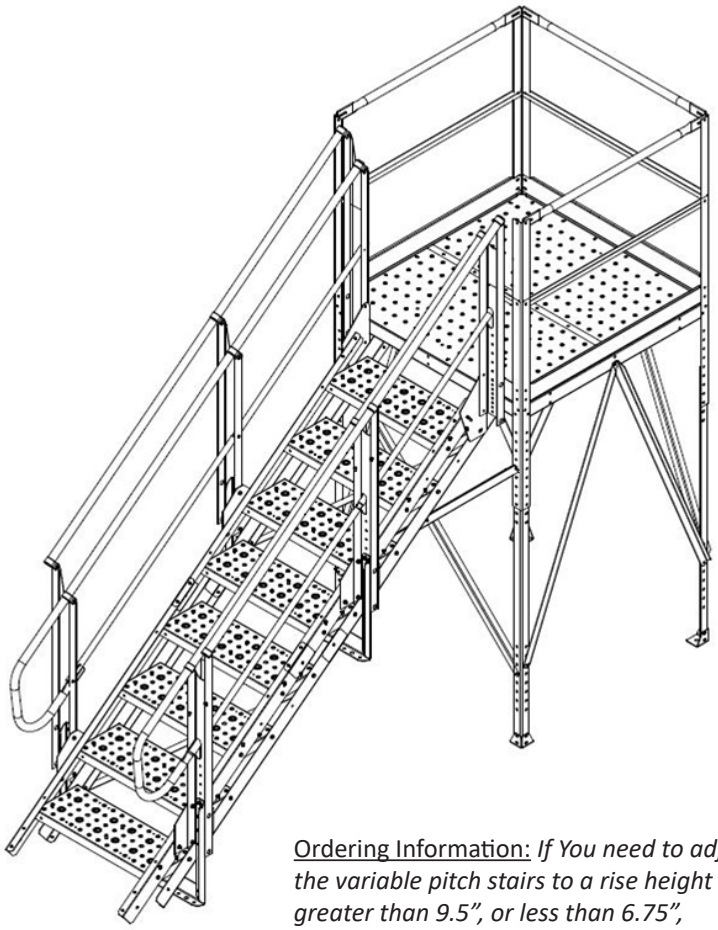

Ordering Information: *If You need to adjust the variable pitch stairs to a rise height greater than 9.5", or less than 6.75", please call to explore your options.*

- *The A-Series Truck Probe Service Platform and Stairs was designed to allow access to elevated truck probes for service or repair*
- *Available with a 4' x 4' or 4' x 6' landing*
- *The 30" x 11" step treads offer a wide clearance between the handrails*
- *1 1/2" round handrails offer a secure and stable grip, with a 42" guardrail and 1" mid-rail*

Item	Description	List Price	Weight		Height at 30°	Height at 45°
AVT44071	A-Series, 4'x4' Landing, 7 Step Straight Up Stair Section	$3,423.00	504	lbs	54"	76"
AVT44081	A-Series, 4'x4' Landing, 8 Step Straight Up Stair Section	$3,572.00	526	lbs	60.75"	85.5"
AVT44091	A-Series, 4'x4' Landing, 9 Step Straight Up Stair Section	$3,722.00	550	lbs	67.5"	95"
AVT46071	A-Series, 4'x6' Landing, 7 Step Straight Up Stair Section	$3,956.00	583	lbs	54"	76"
AVT46081	A-Series, 4'x6' Landing, 8 Step Straight Up Stair Section	$4,106.00	605	lbs	60.75"	85.5"
AVT46091	A-Series, 4'x6' Landing, 9 Step Straight Up Stair Section	$4,269.00	629	lbs	67.5"	95"

C-Series Roof Stairs

Product Line Card Available

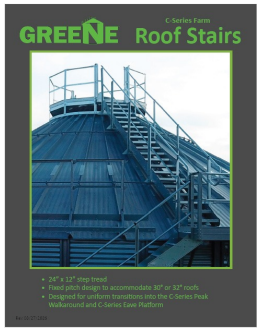

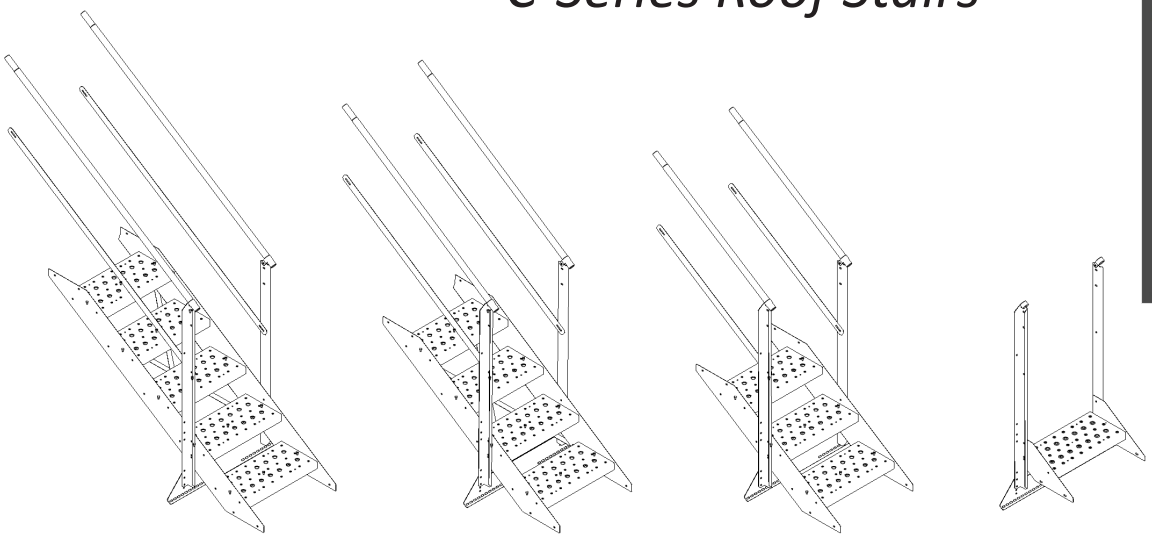

Ordering Information:

- *Includes top and intermediate handrail on both sides*
- *Parts listed below are for 32° roof. For 30° roofs, replace the 2 with a 0. For example, CFRT5005 is a 5 Step Stair for a 30° roof*
- *For ease of ordering, the packages on the following page are configured for your bin size by diameter*

Item	Description	List Price	Weight		Linear Ft of Run
CFRT5205	5 Step Stair, Roof, C-Series, 32° Farm Duty	$818.00	112	lbs	5.9
CFRT5204	4 Step Stair, Roof, C-Series, 32° Farm Duty	$694.00	95	lbs	4.7
CFRT5203	3 Step Stair, Roof, C-Series, 32° Farm Duty	$562.00	77	lbs	3.6
CFRT5201	1 Step Stair, Roof, C-Series, 32° Farm Duty	$314.00	47	lbs	1.2

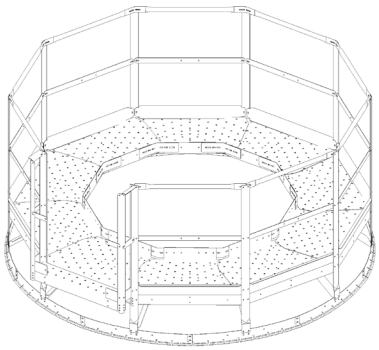

C-Series Roof Stairs

Ordering Information:

- *Ensure the OUTSIDE DIAMETER is at leat 3 times greater than the fill hole diameter*
- *Ensure the INSIDE DIAMETER is at least 3" greater than the fill lid*
- *Kit comes standard with one entry. To add additional entries, order the CRD0010 to convert any deck section to an entry*
- *For ease of ordering, the packages on the following page are configured for your bin size diameter*

Item	Description	List Price	Weight		Inside Diameter	Outside Diameter
CRD0800	8 Section C-Series Peak Walkaround	$2,665.00	365	lbs	44.75”	101”
CRD0900	9 Section C-Series Peak Walkaround	$2,957.00	405	lbs	57.2”	113”
CRD1000	10 Section C-Series Peak Walkaround	$3,278.00	449	lbs	70”	125”
CRD1100	11 Section C-Series Peak Walkaround	$3,592.00	492	lbs	82.25”	137”
CRD1200	12 Section C-Series Peak Walkaround	$3,906.00	535	lbs	95.5”	149”
CRD1300	13 Section C-Series Peak Walkaround	$4,227.00	579	lbs	108.75”	162”
CRD1400	14 Section C-Series Peak Walkaround	$4,387.00	601	lbs	120.25”	173”
CRD0814	Single Section C-Series Peak Walkaround	$314.00	43	lbs		
CRD0010	Entry Kit, C-Series Peak Walkaround	$204.00	28	lbs		

C-Series Roof Packages

Packages include Roof Stairs, Peak Walkaround, and Manhole Guardrail

Parts listed below are for a 32° roof. For 30° roofs, replace the 2 with a 0. For example, CFR001810 is a package for an 18' diameter bin with a 30° roof.

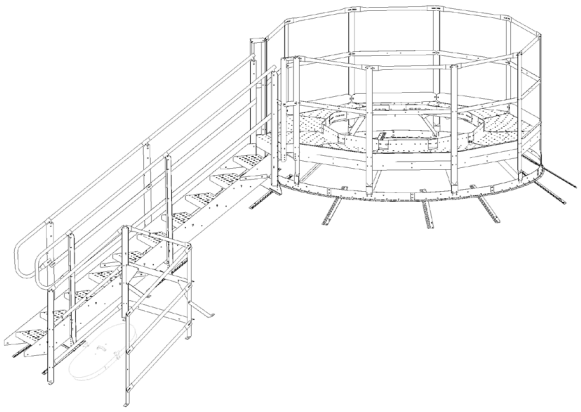

Bin Diameter	Item ID	Description	List Price	Weight		Walkaround Sections
18’	CFR201810	18’, C-Series, 32° Farm Duty	$4,685.00	633	lbs	10
21’	CFR202111	21’, C-Series, 32° Farm Duty	$5,131.00	694	lbs	11
24’	CFR202410	24’, C-Series, 32° Farm Duty	$5,247.00	710	lbs	10
27’	CFR202711	27’, C-Series, 32° Farm Duty	$5,693.00	771	lbs	11
30’	CFR203010	30’, C-Series, 32° Farm Duty	$5,635.00	763	lbs	10
33’	CFR203311	33’, C-Series, 32° Farm Duty	$6,073.00	823	lbs	11
36’	CFR203610	36’, C-Series, 32° Farm Duty	$6,197.00	840	lbs	10
39’	CFR203911	39’, C-Series, 32° Farm Duty	$6,635.00	900	lbs	11
42’	CFR204210	42’, C-Series, 32° Farm Duty	$6,577.00	892	lbs	10
45’	CFR204511	45’, C-Series, 32° Farm Duty	$7,197.00	977	lbs	11
48’	CFR204810	48’, C-Series, 32° Farm Duty	$7,139.00	969	lbs	10
51’	CFR205111	51’, C-Series, 32° Farm Duty	$7,585.00	1030	lbs	11
54’	CFR205410	54’, C-Series, 32° Farm Duty	$7,701.00	1046	lbs	10
57’	CFR205711	57’, C-Series, 32° Farm Duty	$8,147.00	1107	lbs	11
60’	CFR206010	60’, C-Series, 32° Farm Duty	$8,089.00	1099	lbs	10
63’	CFR206311	63’, C-Series, 32° Farm Duty	$8,527.00	1159	lbs	11
66’	CFR206610	66’, C-Series, 32° Farm Duty	$8,651.00	1176	lbs	10
69’	CFR206911	69’, C-Series, 32° Farm Duty	$9,089.00	1236	lbs	11
72’	CFR207210	72’, C-Series, 32° Farm Duty	$9,031.00	1228	lbs	10
75’	CFR207511	75’, C-Series, 32° Farm Duty	$9,651.00	1313	lbs	11
78’	CFR207810	78’, C-Series, 32° Farm Duty	$9,593.00	1305	lbs	10
81’	CFR208111	81’, C-Series, 32° Farm Duty	$10,039.00	1366	lbs	11
84’	CFR208410	84’, C-Series, 32° Farm Duty	$10,155.00	1382	lbs	10
87’	CFR208711	87’, C-Series, 32° Farm Duty	$10,601.00	1443	lbs	11
90’	CFR209010	90’, C-Series, 32° Farm Duty	$10,543.00	1435	lbs	10
93’	CFR209311	93’, C-Series, 32° Farm Duty	$10,981.00	1495	lbs	11
96’	CFR209610	96’, C-Series, 32° Farm Duty	$11,105.00	1512	lbs	10
99’	CFR209911	99’, C-Series, 32° Farm Duty	$11,543.00	1572	lbs	11
102’	CFR210210	102’, C-Series, 32° Farm Duty	$11,485.00	1564	lbs	10
105’	CFR210511	105’, C-Series, 32° Farm Duty	$12,105.00	1649	lbs	11

Easy Step Roof Ladder Handrail

Product Line Card Available

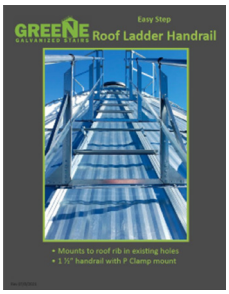

Illustration depicts an ES61100, ES61233, and 51450.

Items are sold individually.

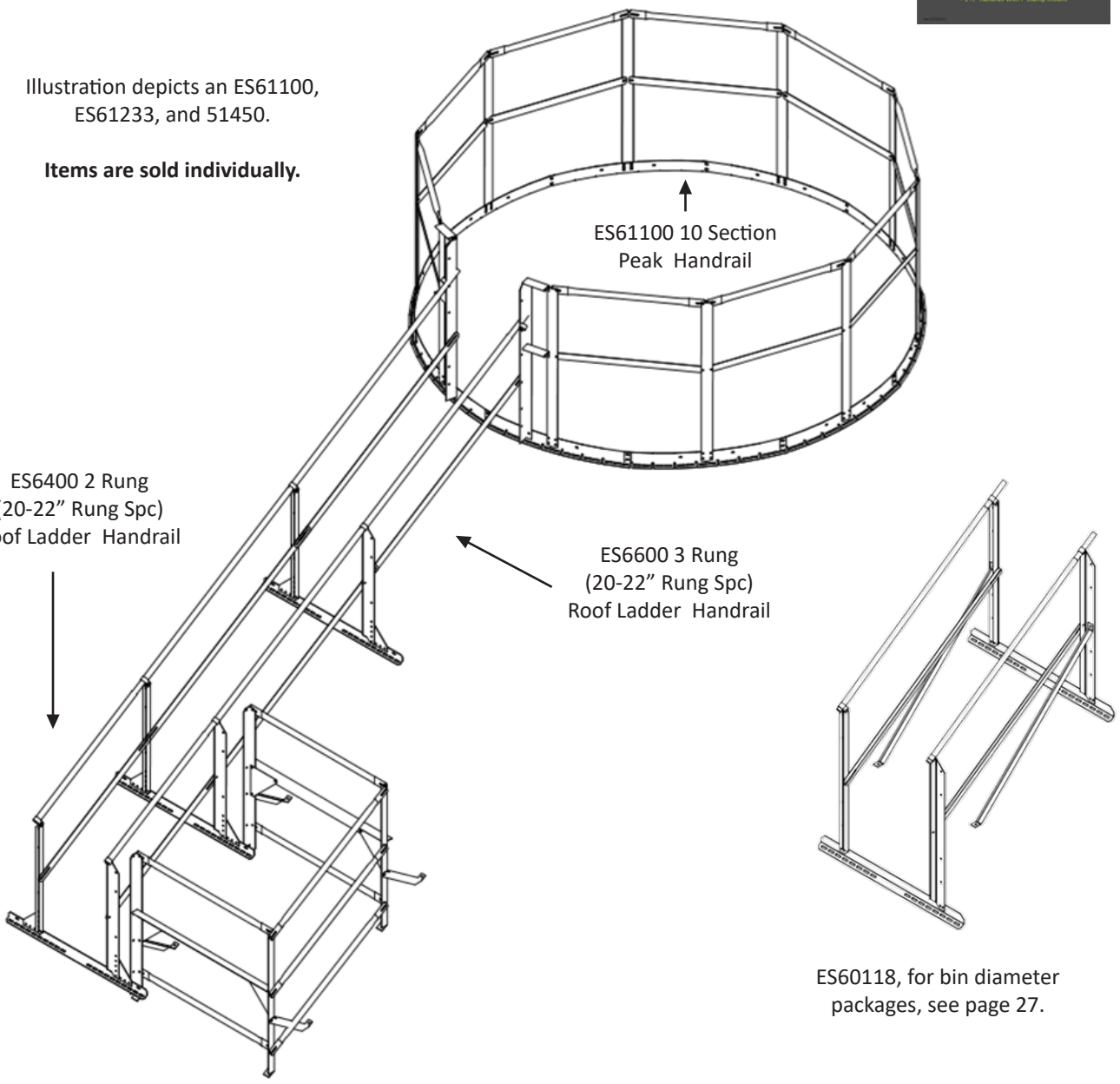

ES60118, for bin diameter packages, see page 27.

Ordering Information: *Easy Step Roof Ladder Handrail sections bolt to the ladder rungs attached on the bin roof between roof ribs. They come in two rung and three rung space lengths.*

The Roof Ladder Handrail packages are configured for use with the ES61100 or ES51100 peak package. If you are not using a peak safety package, order the next size larger Roof Ladder Handrail package. The ES61500 Top Post Package is included in all Easy Step Roof Ladder Handrail bin packages.

Easy Step Roof Ladder Handrail

							Linear
		List			No. of Sections		Feet
Item	Description	Price	Weight		2 Rung	3 Rung	of Run
ES61015	15’ Easy Step Roof Ladder Handrail	$450.00	41	lbs	1	0	3.5
ES60118	18’ Easy Step Roof Ladder Handrail	$484.00	44	lbs	0	1	5.2
ES62021	21’ Easy Step Roof Ladder Handrail	$724.00	66	lbs	2	0	7.0
ES61124	24’ Easy Step Roof Ladder Handrail	$757.00	69	lbs	1	1	8.7
ES63027	27’ Easy Step Roof Ladder Handrail	$999.00	91	lbs	3	0	10.5
ES62130	30’ Easy Step Roof Ladder Handrail	$1,033.00	94	lbs	2	1	12.2
ES61233	33’ Easy Step Roof Ladder Handrail	$1,066.00	97	lbs	1	2	14.0
ES63136	36’ Easy Step Roof Ladder Handrail	$1,306.00	119	lbs	3	1	15.7
ES62239	39’ Easy Step Roof Ladder Handrail	$1,340.00	122	lbs	2	2	17.5
ES61342	42’ Easy Step Roof Ladder Handrail	$1,373.00	125	lbs	1	3	19.2
ES63245	45’ Easy Step Roof Ladder Handrail	$1,615.00	147	lbs	3	2	21.0
ES62348	48’ Easy Step Roof Ladder Handrail	$1,649.00	150	lbs	2	3	22.7
ES61451	51’ Easy Step Roof Ladder Handrail	$1,682.00	153	lbs	1	4	24.5
ES63354	54’ Easy Step Roof Ladder Handrail	$1,922.00	175	lbs	3	3	26.2
ES62457	57’ Easy Step Roof Ladder Handrail	$1,956.00	178	lbs	2	4	28.0
ES61560	60’ Easy Step Roof Ladder Handrail	$1,989.00	181	lbs	1	5	29.7
ES63463	63’ Easy Step Roof Ladder Handrail	$2,229.00	203	lbs	3	4	31.5
ES62566	66’ Easy Step Roof Ladder Handrail	$2,263.00	206	lbs	2	5	33.2
ES61669	69’ Easy Step Roof Ladder Handrail	$2,296.00	209	lbs	1	6	35.0
ES63572	72’ Easy Step Roof Ladder Handrail	$2,538.00	231	lbs	3	5	36.7
ES62675	75’ Easy Step Roof Ladder Handrail	$2,572.00	234	lbs	2	6	38.5
ES61778	78’ Easy Step Roof Ladder Handrail	$2,605.00	237	lbs	1	7	40.2
ES63681	81’ Easy Step Roof Ladder Handrail	$2,845.00	259	lbs	3	6	42.0
ES62783	83’ Easy Step Roof Ladder Handrail	$2,879.00	262	lbs	2	7	43.7
ES61886	86’ Easy Step Roof Ladder Handrail	$2,912.00	265	lbs	1	8	45.5
ES63790	90’ Easy Step Roof Ladder Handrail	$3,154.00	287	lbs	3	7	47.2
ES62893	93’ Easy Step Roof Ladder Handrail	$3,188.00	290	lbs	2	8	49.0
ES61996	96’ Easy Step Roof Ladder Handrail	$3,221.00	293	lbs	1	9	50.7
ES63899	99’ Easy Step Roof Ladder Handrail	$3,461.00	315	lbs	3	8	52.5
ES629102	102’ Easy Step Roof Ladder Handrail	$3,495.00	318	lbs	2	9	54.2
ES6110105	105’ Easy Step Roof Ladder Handrail	$3,528.00	321	lbs	1	10	56.0
ES6400	2 Rung ES Roof Ladder Handrail	$274.00	25	lbs	1	0	3.5
	for ladder rungs 20-22” apart						
ES6200	52”ES Roof Ladder Handrail Section	$298.00	27	lbs	1	0	4.3
	for ladder rungs 26” apart						
ES6600	3 Rung ES Roof Ladder Handrail	$307.00	28	lbs	0	1	5.3
	for ladder rungs 20-22” apart						
ES61500	ES Roof Ladder Handrail Top Post Pkg	$176.00	16	lbs			
51450	Manhole Guardrail, 3 Sided	$531.00	64	lbs			

Easy Step Roof Stairs

Product Line Card Available



Easy Step Roof Stairs are being discontinued January 1st, 2028.
EXPECT 12 WEEK LEAD TIME

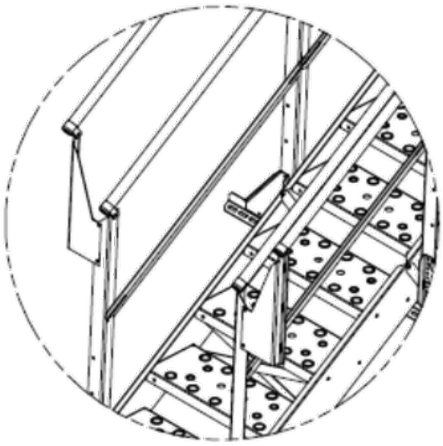

Bolt on guardrail option available,
call for more information.

<u>Ordering Information:</u> Includes top and intermediate handrail on both sides. The length of stairs is configured for use with the ES61100 or ES51100 peak package.

If a top safety package is not used, order the next length up to reach the peak and add an ES51500 to terminate the stair handrail at the peak.

		List			No. of Sections	
Item	Description	Price	Weight		4 Step	6 Step
ES5400	4 Step Easy Step Roof Stair	$651.00	69	lbs	1	0
ES5600	6 Step Easy Step Roof Stair	$880.00	92	lbs	0	1
51450	Manhole Guardrail, 3 sided	$531.00	64	lbs		
ES51500	Easy Step Top Post Package	$192.00	16	lbs		

Easy Step Roof Stairs

Does not meet OSHA regulation 1910.25(c)(3)

Easy Step Roof Stairs are being discontinued January 1st, 2028.
EXPECT 12 WEEK LEAD TIME

							Linear
		List			No. of Sections		Feet
Item	Description	Price	Weight		4 Step	6 Step	of Run
ES51015	15’ Easy Step Roof Stair (4 steps)	$651.00	69	lbs	1	0	3.6
ES50118	18’ Easy Step Roof Stair (6 steps)	$880.00	94	lbs	0	1	5.5
ES52021	21’ Easy Step Roof Stair (8 steps)	$1,301.00	138	lbs	2	0	7.3
ES51124	24’ Easy Step Roof Stair (10 steps)	$1,531.00	163	lbs	1	1	9.1
ES53027	27’ Easy Step Roof Stair (12 steps)	$1,757.00	188	lbs	0	2	11
ES52130	30’ Easy Step Roof Stair (14 steps)	$2,179.00	232	lbs	2	1	12.8
ES51233	33’ Easy Step Roof Stair (16 steps)	$2,408.00	257	lbs	1	2	14.6
ES53136	36’ Easy Step Roof Stair (18 steps)	$2,830.00	301	lbs	3	1	16.4
ES52239	39’ Easy Step Roof Stair (20 steps)	$3,059.00	326	lbs	2	2	18.3
ES51342	42’ Easy Step Roof Stair (22 steps)	$3,288.00	351	lbs	1	3	20.1
ES53245	45’ Easy Step Roof Stair (24 steps)	$3,710.00	395	lbs	3	2	21.9
ES52348	48’ Easy Step Roof Stair (26 steps)	$3,939.00	420	lbs	2	3	23.8
ES51451	51’ Easy Step Roof Stair (28 steps)	$4,168.00	445	lbs	1	4	25.6
ES53354	54’ Easy Step Roof Stair (30 steps)	$4,396.00	470	lbs	0	5	27.5
ES52457	57’ Easy Step Roof Stair (32 steps)	$4,816.00	514	lbs	2	4	29.3
ES51560	60’ Easy Step Roof Stair (34 steps)	$5,045.00	539	lbs	1	5	31.1
ES53463	63’ Easy Step Roof Stair (36 steps)	$5,467.00	583	lbs	3	4	32.9
ES52566	66’ Easy Step Roof Stair (38 steps)	$5,696.00	608	lbs	2	5	34.8
ES51669	69’ Easy Step Roof Stair (40 steps)	$5,925.00	633	lbs	1	6	36.6
ES53572	72’ Easy Step Roof Stair (42 steps)	$6,155.00	658	lbs	0	7	38.5
ES52675	75’ Easy Step Roof Stair (44 steps)	$6,576.00	702	lbs	2	6	40.3
ES51778	78’ Easy Step Roof Stair (46 steps)	$6,805.00	727	lbs	1	7	42.1
ES53681	81’ Easy Step Roof Stair (48 steps)	$7,227.00	771	lbs	3	6	43.9
ES52784	84’ Easy Step Roof Stair (50 steps)	$7,455.00	796	lbs	2	7	45.8
ES51887	87’ Easy Step Roof Stair (52 steps)	$7,683.00	821	lbs	1	8	47.6
ES53790	90’ Easy Step Roof Stair (54 steps)	$7,912.00	846	lbs	0	9	49.5
ES52893	93’ Easy Step Roof Stair (56 steps)	$8,333.00	890	lbs	2	8	51.3
ES529102	102’ Easy Step Roof Stair (62 steps)	$9,213.00	984	lbs	2	9	56.8
ES5110105	105’ Easy Step Roof Stair (64 steps)	$8,211.00	1009	lbs	1	10	58.6
ES5111114	114’ Easy Step Roof Stair (70 steps)	$10,322.00	1103	lbs	1	11	64.1
ES5113132	132’ Easy Step Roof Stair (82 steps)	$12,080.00	1291	lbs	1	13	75.1
ES5312135	135’ Easy Step Roof Stair (84 steps)	$12,308.00	1316	lbs	0	14	77
ES5215156	156’ Easy Step Roof Stair (98 steps)	$14,488.00	1548	lbs	2	15	89.8

Easy Step Peak Handrail

Product Line Card Available



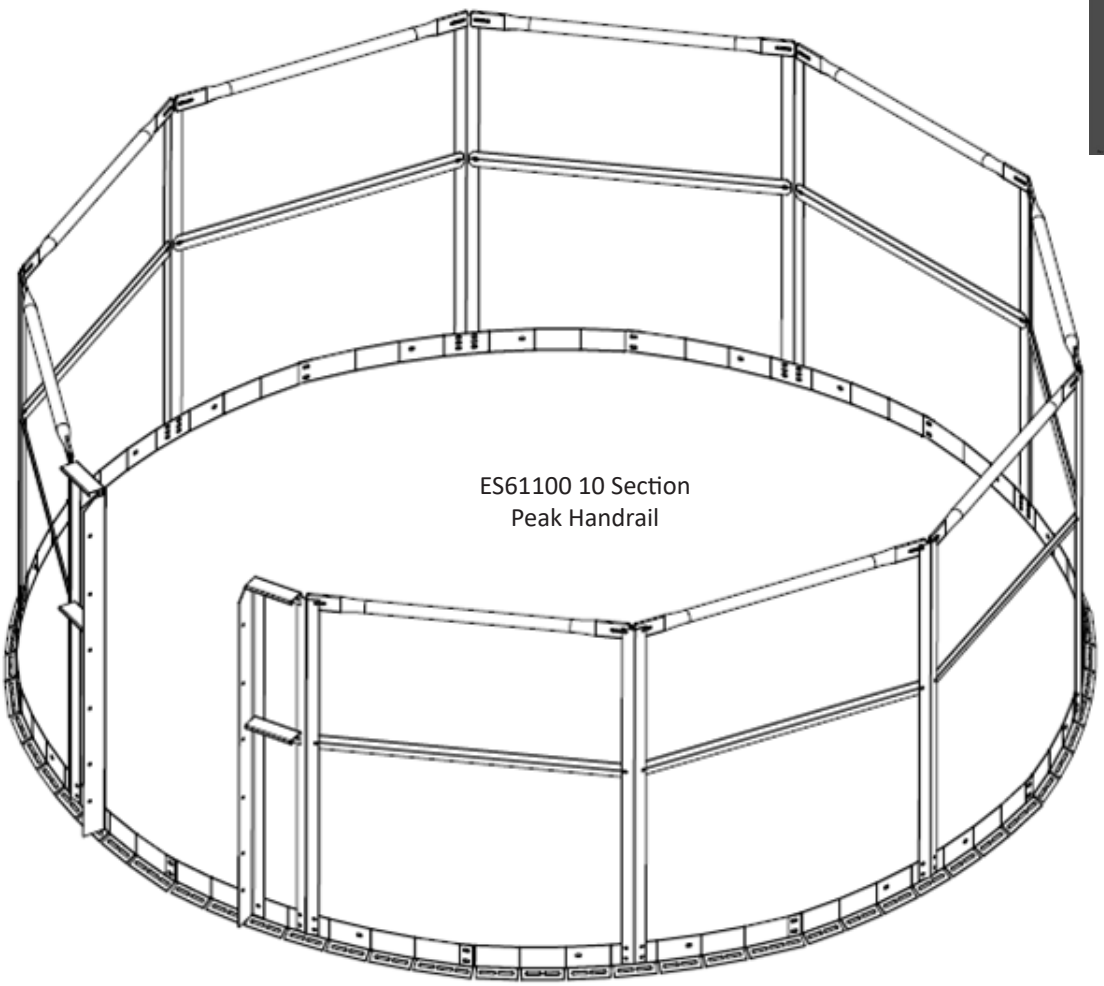

ES61100 10 Section
Peak Handrail

<u>Ordering Information:</u> If using Easy Step Roof Stairs or Easy Step Roof Ladder Handrail with your peak handrail:

ES60700: go up 1 size from bin diameter
ES60900 & ES61100: use bin diameter
ES61300: go down 1 size from bin diameter

		Inside	Outside			
Item	Description	Diameter	Diameter	List Price	Weight	
ES60700	Easy Step 7 Section Peak Handrail	81”	7’	$937.00	110	lbs
ES60900	Easy Step 9 Section Peak Handrail	105”	9’	$1,207.00	142	lbs
ES61100	Easy Step 10 Section Peak Handrail	117”	10’	$1,328.00	155	lbs
ES61300	Easy Step 13 Section Peak Handrail	153”	13’	$1,670.00	195	lbs
ES60100	Easy Step Single Section (adds 1’ diameter to package)		+1’ OD	$135.00	16	lbs
ES60001	Additional Easy Step Peak Handrail Entry Post Package			$189.00	22	lbs

Easy Step Peak Walkaround

Product Line Card Available

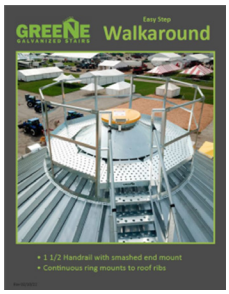

Easy Step Walkarounds are being discontinued January 1st, 2028.
EXPECT 12 WEEK LEAD TIME

Illustration depicts an ES51100 Walkaround, ES51124 Roof Stair, 51450 Manhole Guardrail, and ESLA01 Ladder Access.

Items are sold individually.

<u>Ordering Information:</u> If using Easy Step Roof Stairs or Easy Step Roof Ladder Handrail with your peak walkaround:

ES50700: go up 1 size from bin diameter
ES50900 & ES51100: use bin diameter
ES51400 & ES51600: go down 1 size from bin diameter.

To determine the minimum walkaround size to allow space for the fill lid:

- *Ensure the OUTSIDE DIAMETER is at least 3 times greater than the fill hole diameter*
- *Ensure the INSIDE DIAMETER is at least 3” greater than the fill lid*

					Inside	Outside
Item	Description	List Price	Weight		Diameter	Diameter
ES50700	Easy Step 7’ Walkaround	$2,665.00	225	lbs	38 7/8”	87”
ES50900	Easy Step 9’ Walkaround	$2,957.00	271	lbs	65 1/8”	115”
ES51100	Easy Step 10’ Walkaround	$3,278.00	317	lbs	76 1/2”	125”
ES51200	Easy Step 12’ Walkaround	$3,908.00	430	lbs	103 5/16”	145”
ES51400	Easy Step 14’ Walkaround	$4,737.00	540	lbs	126 1/2”	173”
ES51600	Easy Step 16’ Walkaround	$5,409.00	616	lbs	153”	201”
ES50750	Additional Entry Kit for ES50700	$327.00	33	lbs		
ES50950	Additional Entry Kit for ES50900	$327.00	33	lbs		
ES51150	Additional Entry Kit for ES51100	$327.00	33	lbs		
ES51250	Entry Section for ES 12’, 14’, or 16’ Walkaround	$135.00	15	lbs		
ESLA01	Ladder Access Landing	$703.00	73	lbs		
	(Package will work on all Easy Step Walkarounds, but you must add and entry deck if smaller than 12’.)					
51450	Manhole Guardrail, 3 sided	$531.00	64	lbs		

A-Series Roof Stairs

Product Line Card Available

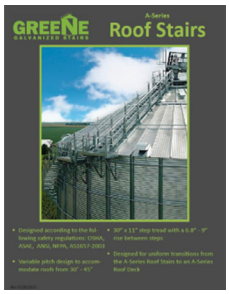

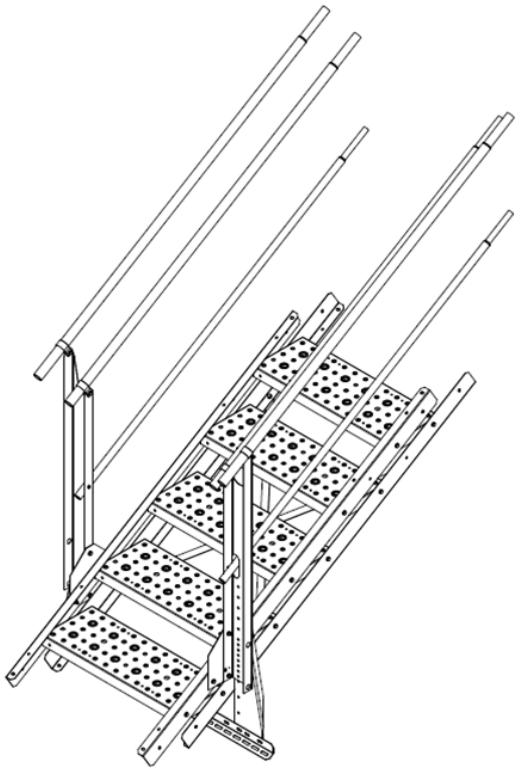

ART5005 Intermediate Section

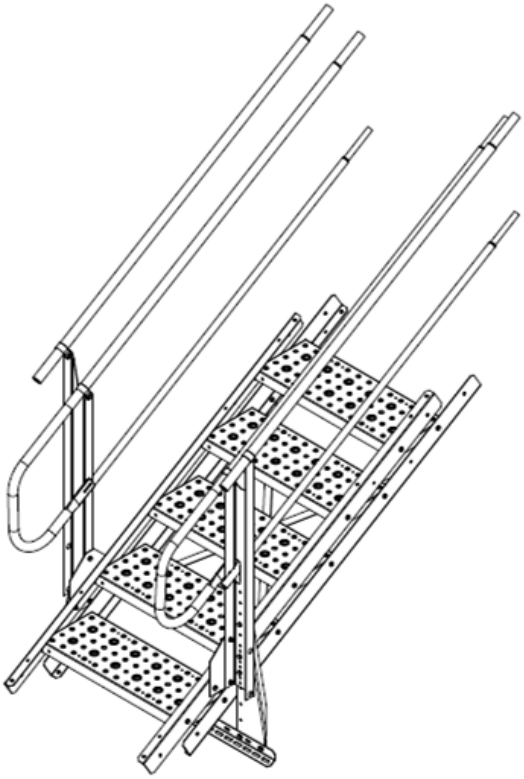

ART5005 Shown with bottom end rails from Entry Post Kit

<u>Ordering Information:</u> Variable pitch design from 30°-45°. 1 ½" round handrail with telescopic ends. Adjustable mounting height allows for consistent step transition from lower platform to stairs. Compatible with A-Series Arrest Landings and A-Series Roof Decks for commercial applications. Allows for rest landings on the roof every 18 steps. Rise per step 6.7" at 30° and 9.5" at 45°.

		List			Linear Feet of Run
Item	Description	Price	Weight		
ART5001	Peak Top Step Kit (includes rounded bottom pipes)	$720.00	106	lbs	2.3
ARD0010	A-Series Stair Landing Top of Flight	$704.00	104	lbs	
ART5003	A-Series 3 Step Mid Stair Section	$754.00	111	lbs	3.4
ART5004	A-Series 4 Step Mid Stair Section	$912.00	134	lbs	4.5
ART5014	A-Series 4 Step Roof Stair Top Section	$866.00	128	lbs	4.3
ART5005	A-Series 5 Step Mid Stair Section	$1,071.00	158	lbs	5.6
ART5010	A-Series Top Post Package (includes bottem end rails)	$341.00	44	lbs	
ARD0001	A-Series Roof Deck Entry Post Kit (includes bottom end rails)	$285.00	22	lbs	

A-Series Roof Stairs

With 9’ Walkaround (not flat top)								
ARD0900								
Bin Diameter	# of Steps	Item Number	List Price	Weight		Linear Feet of Run		
15’	5	ART1005	$1,025.00	151	lbs	5.4		
18’	6	ART1006	$1,461.00	175	lbs	6.5		
24’	9	ART1009	$1,937.00	285	lbs	9.9		
27’	11	ART1011	$2,532.00	373	lbs	12.1		
With 12’ Walkaround (not flat top)						No Walkaround (not flat bin top)		
ARD1200							(Add ART5010 Top Post)	
Bin Diameter	# of Steps	Item Number	List Price	Weight		Linear Feet of Run	Bin Diameter	Based on 36 inch fill ring
24’	7	ART1007	$1,620.00	238	lbs	7.6		# of steps
27’	9	ART1009	$1,937.00	285	lbs	9.9	18’	9
30’	11	ART1011	$2,532.00	373	lbs	12.1	21’	11
33’	12	ART1012	$2,691.00	396	lbs	13.3	24’	12
36’	14	ART1014	$3,008.00	443	lbs	15.5	27’	14
39’	15	ART1015	$3,445.00	507	lbs	16.6	30’	15
42’	17	ART1017	$3,762.00	554	lbs	18.9	33’	17
45’	19	ART1019	$4,079.00	600	lbs	21.1	36’	19
48’	20	ART1020	$4,516.00	665	lbs	22.3	39’	20
51’	22	ART1022	$4,833.00	711	lbs	24.5	42’	22
54’	23	ART1023	$4,991.00	735	lbs	25.6	45’	23
57’	25	ART1025	$5,587.00	822	lbs	27.9	48’	25
60’	27	ART1027	$5,904.00	869	lbs	30.1	51’	27
63’	28	ART1028	$6,062.00	892	lbs	31.3	54’	28
66’	30	ART1030	$6,658.00	980	lbs	33.5	57’	30
69’	31	ART1031	$6,816.00	1003	lbs	34.6	60’	31
72’	33	ART1033	$7,133.00	1050	lbs	36.9	63’	33
75’	35	ART1035	$7,729.00	1138	lbs	39.1	66’	35
78’	36	ART1036	$7,887.00	1161	lbs	40.3	69’	36
81’	38	ART1038	$8,204.00	1208	lbs	42.5	72’	38
84’	39	ART1039	$8,363.00	1231	lbs	43.6	75’	39
87’	41	ART1041	$8,958.00	1319	lbs	45.9	78’	41
90’	43	ART1043	$9,275.00	1365	lbs	48.1	81’	43
93’	44	ART1044	$9,434.00	1389	lbs	49.3	84’	44
99’	47	ART1047	$10,188.00	1499	lbs	52.6	90’	47
102’	49	ART1049	$10,505.00	1546	lbs	54.9	93’	49
105’	51	ART1051	$11,100.00	1634	lbs	57.1	96’	51
114’	55	ART1055	$12,013.00	1768	lbs	61.6	105’	55
123’	60	ART1060	$13,084.00	1926	lbs	67.3	114’	60
132’	65	ART1065	$14,155.00	2083	lbs	72.9	123’	65
135’	67	ART1067	$14,472.00	2130	lbs	75.1	126’	67
144’	71	ART1071	$15,384.00	2264	lbs	79.6	135’	71
156’	78	ART1078	$16,772.00	2469	lbs	87.5	147’	78
		ART1083	$17,843.00	2626	lbs	93.1	156’	83

A-Series Roof Deck

Product Line Card Available



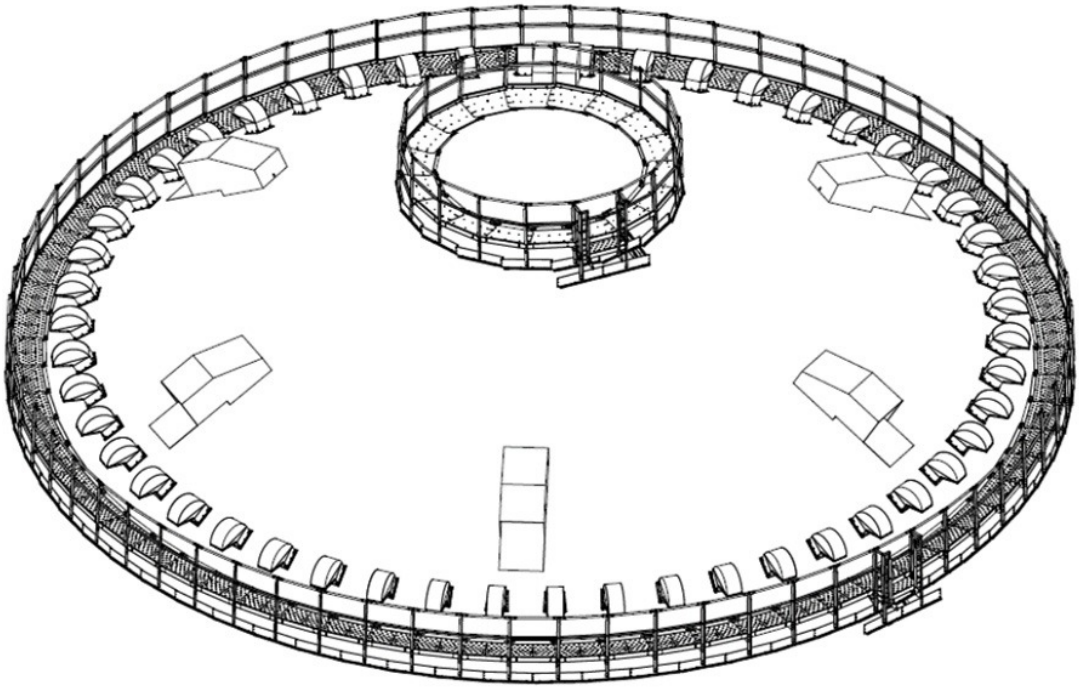

- *The A-Series Roof Deck is designed with simplified installation in mind and allows for stair transitions that are compliant with applicable standards for safety and reliability.*
- *Each section is equivalent to 1’ of the outside deck diameter. Example: 48’ outside diameter deck is 48 Sections of ARD2480.*
- *Available in 3 different sizes, ranging from 12’ diameter up to a straight line deck, such as on a building roof.*
- *Designed for roof slopes from 30° to 40°.*
- *Arrest landings can be configured as required by local and regional safety standards to allow for rest landings in the run.*
- *Another benefit of the rest landings is the ability to change roof stair approach from the eave platform. An eave platform may be at 6 o’clock, but the best approach to the peak may be at 9 o’clock. The lower stair can approach the mid roof deck at 6 o’clock, walk around the deck to 9 o’clock, and proceed up the stairs to the peak of the bin.*

Item	Description	List Price	Weight	
ARD1236	A-Series Roof Deck 12-36’ Diameter	$386.00	75	lbs
ARD2480	A-Series Roof Deck 24-80’ Diameter	$386.00	75	lbs
ARD2480AL	A-Series Roof Deck 24-80’ Diameter Arrest Landing Section	$571.00	84	lbs
ARD2480AS	A-Series Starter for ARD2480AL	$814.00	120	lbs
ARD60180	A-Series Roof Deck 60’-Straight Run (180 deg)	$386.00	75	lbs
ARD-M01	Universal V-Rib Mount (one per section minimum)	$26.57	7	lbs
ARD-M02	J-Rib Mount (one per section minimum)	$26.57	8	lbs
ARD-M03	New Chief V-Rib Mount (one per section minimum)	$26.57	7	lbs
ARD0010	A-Series Deck Extension Landing	$704.00	96	lbs
ARD0001	A-Series Roof Deck Entry Posts	$285.00	22	lbs
ASG100	A-Series Self Closing Gate, Galvanized	$348.00	38	lbs

Product Line Card Available



A-Series Walkaround

For your ordering convenience, we've put together multiple A-Series Roof Deck packages that are similar to the Easy Step Walkaround packages. See page 34 for system details.

					Inside
Item	Description	List Price	Weight		Diameter
ARD0900	9' A-Series Walkaround Package	$3,560.00	595	lbs	40"
ARD0900CJ	9' A-Series Walkaround Package, Chief V-Rib Mount	$3,560.00	595	lbs	40"
ARD1000	10' A-Series Walkaround Package	$4,146.00	661	lbs	45"
ARD1000 CJ	10' A-Series Walkaround Package, Chief V-Rib Mount	$4,146.00	661	lbs	45"
ARD1200	12' A-Series Walkaround Package	$5,116.00	1034	lbs	87"
ARD1200 CJ	12' A-Series Walkaround Package, Chief V-Rib Mount	$5,116.00	1034	lbs	87"
ARD1400	14' A-Series Walkaround Package	$5,907.00	1198	lbs	111"
ARD1400CJ	14' A-Series Walkaround Package, Chief V-Rib Mount	$5,907.00	1198	lbs	111"
ARD1600	16' A-Series Walkaround Package	$6,697.00	1362	lbs	135"
ARD1600CJ	16' A-Series Walkaround Package, Chief V-Rib Mount	$6,697.00	1362	lbs	135"
ARD1800	18' A-Series Walkaround Package	$7,488.00	1526	lbs	159"
ARD1800CJ	18' A-Series Walkaround Package, Chief V-Rib Mount	$7,488.00	1526	lbs	159"
ASG100	A-Series Self Closing Gate, Galvanized	$348.00	38	lbs	

Perimeter Safety Rail

Product Line Card Available



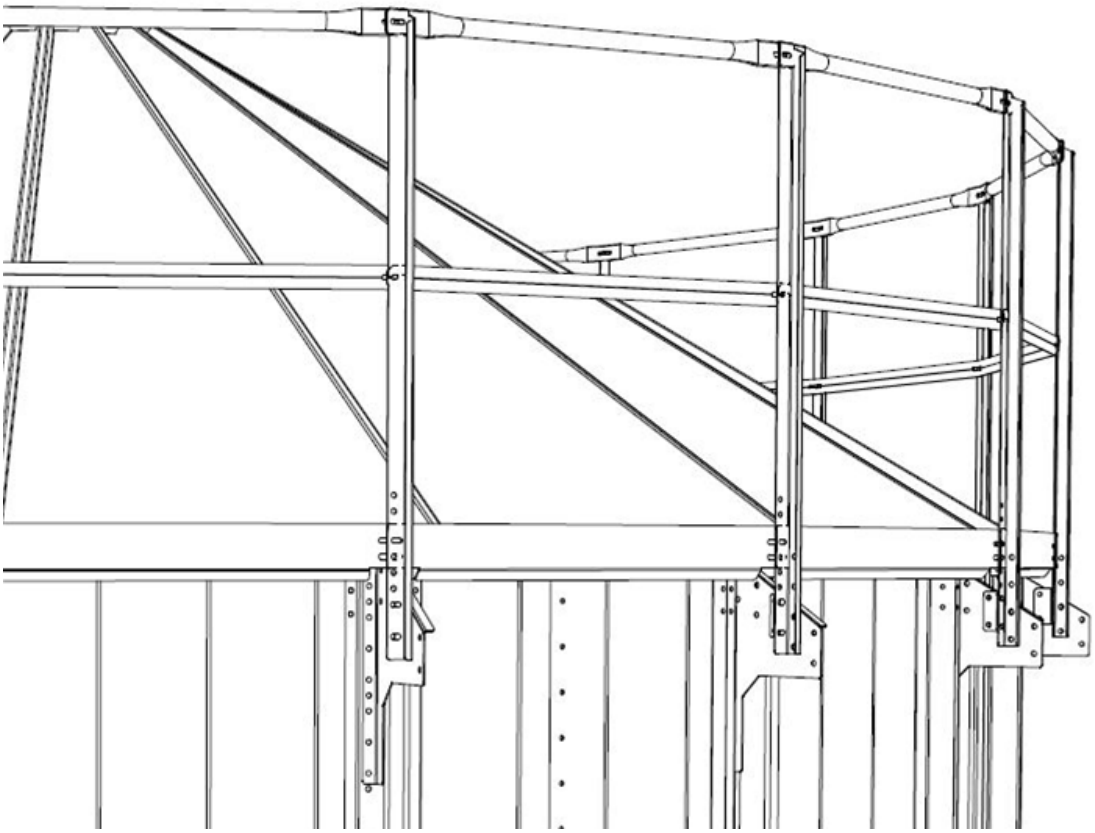

- *Guard Rail for Eave Perimeter that mounts to the bin wall*
- *Can attach to every stiffener on a 3 stiffened tank, and every other on a 2 stiffened tank*
- *On a 3 stiffened bin can be retrofitted without bin entry*
- *Available in 2 sizes; standard bolt spacing or Chief and Behlen bolt spacing*
- *Toe kick allows roof trash to wash away*
- *1 1/2” round handrail with formed ends make for a secure and stable grip*

Ordering Information: *Order 3 or 4 PSR sections for each wall panel (bin sheet) for 3 or 4 panel roofs. For Behlen bins, order 1—PSR4239 for each 1’ in diameter.*

Item	Description	List Price	Weight
PSR3750	Perimeter Safety Rail, single section, 3 panel roof	$224.00	22
PSR4239	Perimeter Safety Rail, single section, Chief or Behlen, 3 panel roof	$224.00	22
PSR3750-4	Perimeter Safety Rail, single section, 4 panel roof	$224.00	20
PSR4239-4	Perimeter Safety Rail, single section, Chief 4 panel roof	$224.00	20

Product Line Card Available



MRH Roof Handrail

US Patent 8,595,990

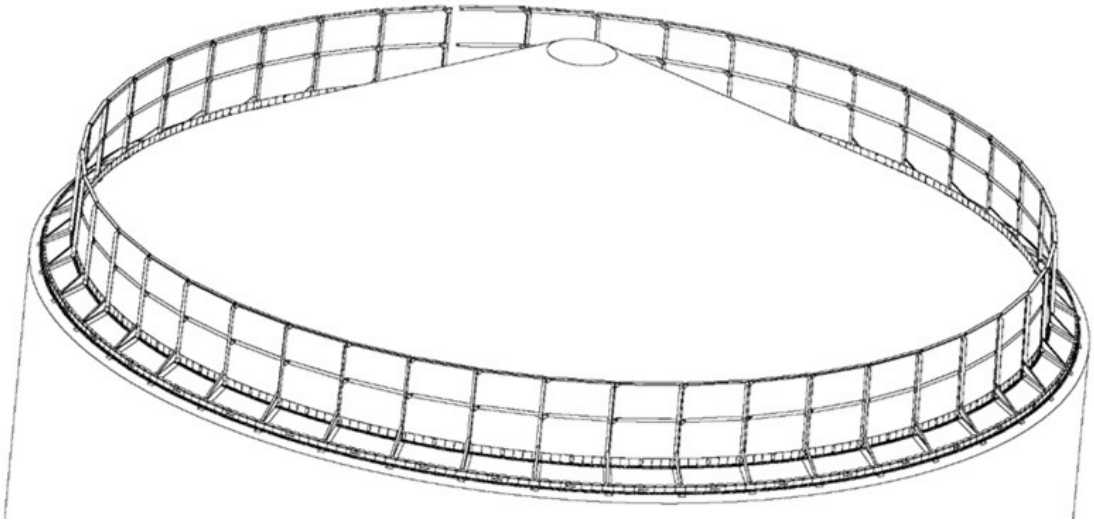

<u>How to Calculate Parts Needed for Mid-Roof Handrail:</u>

<u>Number of Sections:</u> One Mid-Roof Handrail section (MRH001) for each foot of desired diameter.

<u>Number of Roof Mounts:</u> One Roof Mount (MRV_1) for each roof panel covered by the Mid-Roof Handrail. The minimum number of mounts needed is 1 per section of MRH001.

<u>Number of Entries:</u> One entry section (MRHE01) for each instance that you need to pass through the Mid-Roof Handrail.

24" of roof run must be allowed outside of the handrail to allow for mounting hardware, and 36" off of the diameter.

<u>Example:</u> If the handrail will be placed halfway down the roof of a 60' diameter bin, the handrail diameter (inside diameter) will be 30', you order Quantity 30 MRH001. If there are 60 roof panels at the Mid-Roof Handrail roof location, order Quantity 60 MRV_1. Indicate the bin manufacturer when ordering because the mounts are brand specific to correspond to the pre-punched roof rib holes. Typically, at least 1 entry section will be required for each system.

Please call for assistance with any configuration questions.

Item	Description	List Price	Weight	
MRH001	Mid Roof Handrail	$212.00	32	lbs
MRHE01	MRH Entry Section	$410.00	56	lbs
MRVB1	Behlen Mount Foot	$12.00	3	lbs
MRVC1	Chief Mount Foot	$12.00	2	lbs
MRVS1	Sukup Mount Foot	$12.00	3	lbs
MRVX1	Sioux Steel Mount Foot	$12.00	3	lbs
MRVK1	Brock Mount Foot	$12.00	3	lbs
MRVT1	Twister Mount Foot	$12.00	3	lbs

A-Series Sidewall Deck (Eave Walkaround)

Product Line Card Available



US Patent: 8,595,989

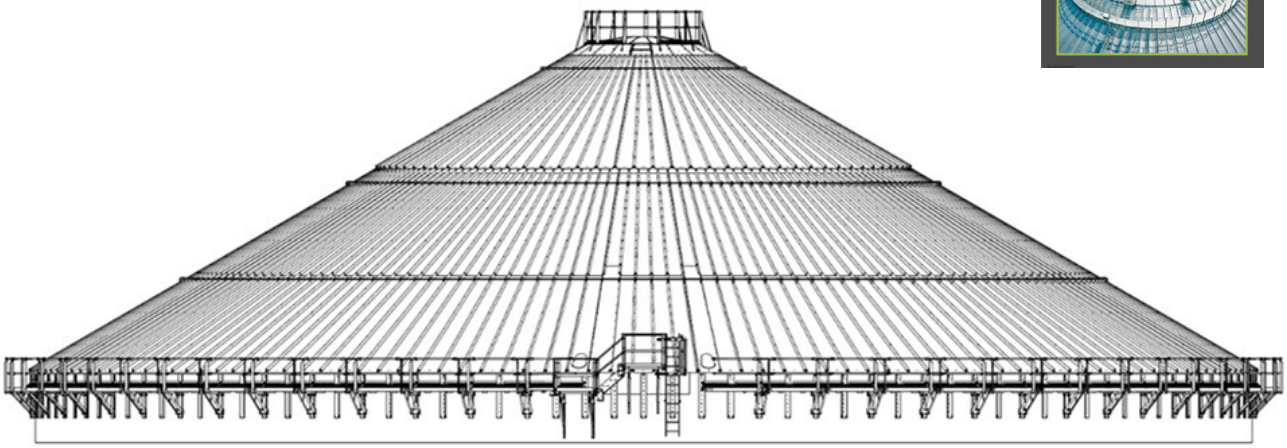

Drawing illustrates a 3 stiffened 132’ bin with the skip a stiffener deck.

- *The Sidewall Deck is available as a walkway option around the sidewall of an externally stiffened bin. It is attached by field drilling through the face of the stiffeners and attaching AWD001 mounting brackets.*
- *Bins with two stiffeners per sidewall panel require one mount and one deck section per stiffener.*
- *Bins with three stiffeners per sidewall panel below 30’ in diameter require one mount and one deck section per stiffener. Three stiffened bins above 30’ may utilize the skip a stiffener configuration where one mount and one deck are used for every other stiffener.*
- *The Sidewall Deck is load rated for 900 lbs.*
- *The ES8500 Series platform and ES7744 Transition Stairs are recommended for use at the manhole, roof stairs, and sidewall ladder or stairs.*
- *For unstiffened bins, see pgs. 4 & 5 utilizing the ladder platform and platform fillers.*

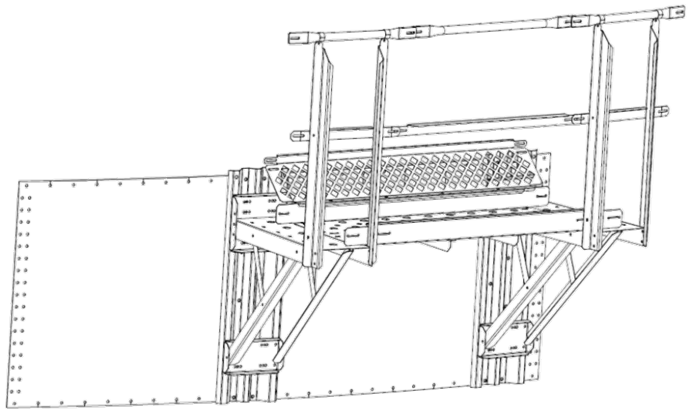

Drawing illustrates (1) AWD213 with (2) AWD001 Mounts

A-Series Sidewall Deck
(Eave Walkaround)

US Patent: 8,505,980

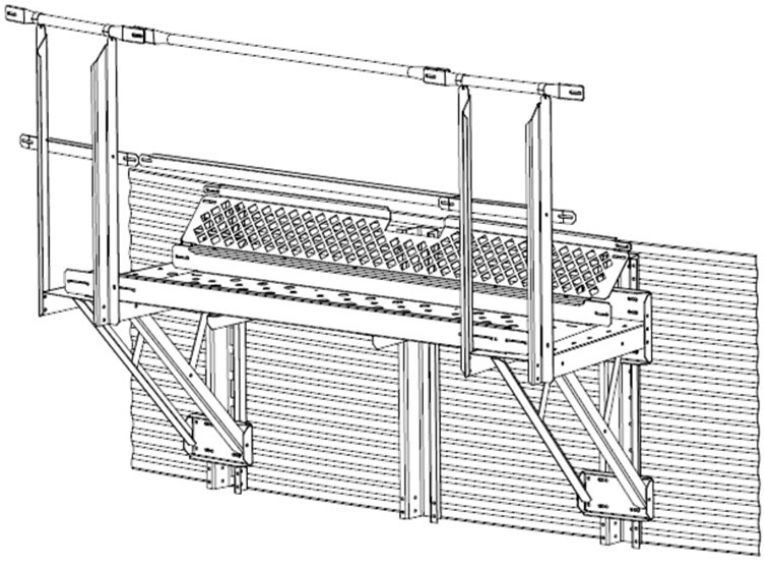

Drawing illustrates (1) AWD302
with (2) AWD001 Mounts

Item	Description	List Price	Weight	
AWD201	A-Series 2 Stiff Std Deck 18-30	$473.00	71	lbs
AWD202	A-Series 2 Stiff Std Deck 30-60	$441.00	66	lbs
AWD203	A-Series 2 Stiff Std Deck 60<Flat	$441.00	65	lbs
AWD211	A-Series Chief 2 Stiff Deck CB6-CB10	$473.00	70	lbs
AWD212	A-Series Chief 2 Stiff Deck CB10-CB20	$441.00	66	lbs
AWD213	A-Series Chief 2 Stiff Deck CB20-Flat	$441.00	65	lbs
AWD221	A-Series Behlen 2 Stiff Deck 5M-8M	$473.00	70	lbs
AWD222	A-Series Behlen 2 Stiff Deck 8M-14M	$473.00	70	lbs
AWD301	A-Series Std 3 Every Stiffener 18-30	$301.00	48	lbs
AWD302	A-Series Std 3 Stiffener Skip 90-Flat	$596.00	94	lbs
AWD304	A-Series Std 3 Stiffener SKP 48-90	$592.00	93	lbs
AWD306	A-Series Std 3 Stiffener SKP 30-48	$601.00	95	lbs
AWD311	A-Series Chief 3 Every Stiffener CB6-CB10	$308.00	49	lbs
AWD312	A-Series Chief 3 Stiffener Skip CB10-CB16	$616.00	97	lbs
AWD314	A-Series Chief 3 Stiffener Skip CB16-CB24	$601.00	95	lbs
AWD316	A-Series Chief 3 Stiffener Skip CB24-Flat	$592.00	93	lbs
AWD321	A-Series Behlen Wall Deck 3 Stiff Every 5M-10M	$308.00	47	lbs
AWD322	A-Series Behlen Wall Deck 3 Stiff Skp 10M-15M	$610.00	97	lbs
AWD324	A-Series Behlen Wall Deck 3 Stiff Skp 15M-23M	$635.00	100	lbs
AWD326	A-Series Behlen Wall Deck 3 Stiff Skp 23M-Flat	$635.00	93	lbs
AWD001	A-Series Walk Deck Mount	$404.00	64	lbs
AWD002	A-Series Sidewall Deck Handrail Termination kit	$228.00	37	lbs

Manwalk Supports

Product Line Card Available

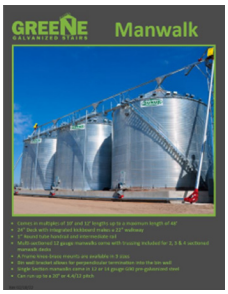

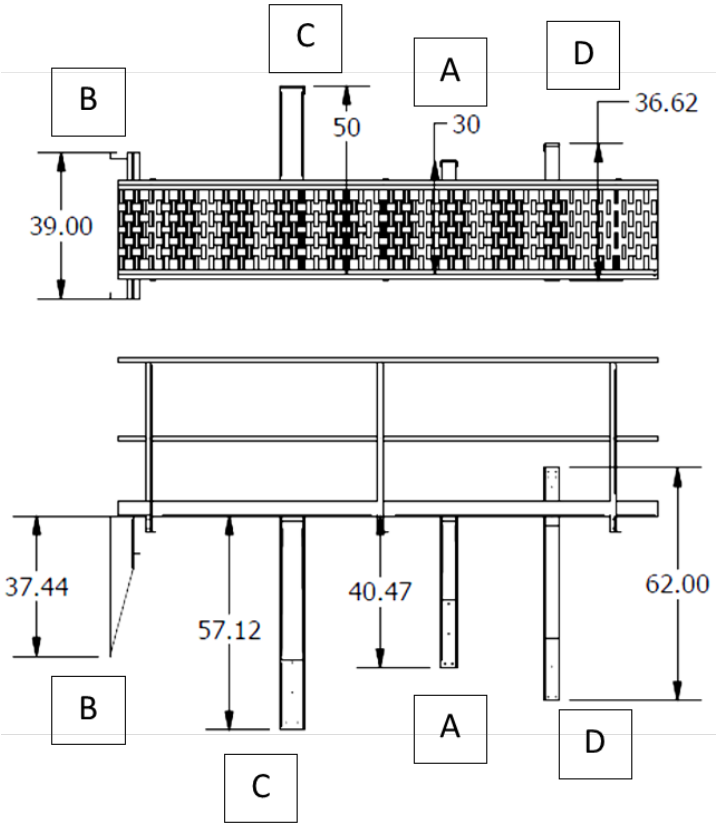

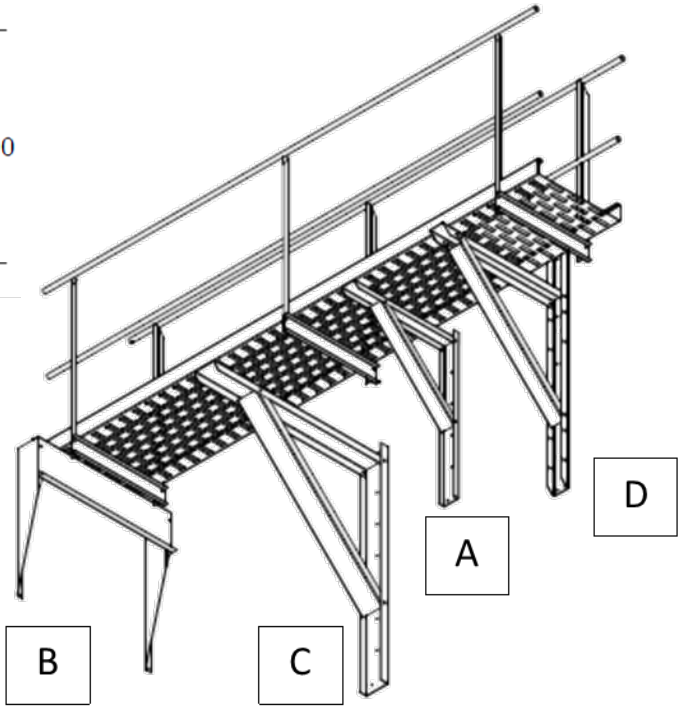

Ordering Information: *Use A-Frame Kneebrace mount for manwalks running parallel to the grain bin wall. Use Bin Wall Bracket for manwalks running perpendicular to the grain bin wall.*

			List		
Key	Item	Description	Price	Weight	
A	60036	A-Frame Kneebrace mount for Manwalk	$250.00	30	lbs
B	60039	Bin Wall Bracket for Manwalk	$259.00	25	lbs
C	60048	48” A-Frame Kneebrace mount for Manwalk	$614.00	70	lbs
D	60636	A-Frame Kneebrace mount for Manwalk 40’-48’	$359.00	41	lbs

Manwalk

40’ - 48’
4 section Manwalk

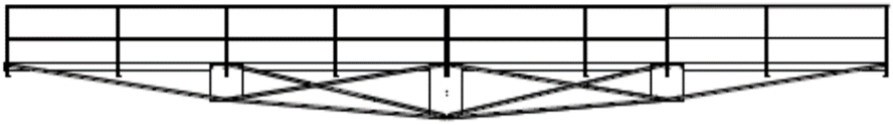

30’ - 36’
3 section Manwalk



20’ - 24’
2 section Manwalk

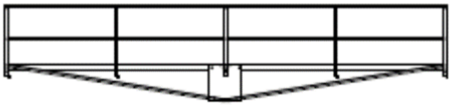

10’ - 12’
1 section Manwalk



Ordering Information: *14ga Manwalks are not to be used in multiple section assemblies. 14ga Manwalks are load rated at 500 lbs. 12ga Manwalks must be used for any configuration over 12 feet. 12ga Manwalks are load rated at 700 lbs. Manwalk pitch should not exceed 20° or 4.3”:12”*

		List		
Item	Description	Price	Weight	
61410	10’ 14ga Manwalk only	$602.00	93	lbs
61412	12’ 14ga Manwalk only	$711.00	112	lbs
61210	10’ 12ga Manwalk only	$783.00	128	lbs
61212	12’ 12ga Manwalk only	$936.00	154	lbs
62410	10’ 14ga Manwalk w/hand & intermediate rails	$1,057.00	205	lbs
62412	12’ 14ga Manwalk w/hand & intermediate rails	$1,273.00	243	lbs
62210	10’ 12ga Manwalk w/hand & intermediate rails	$1,240.00	240	lbs
62212	12’ 12ga Manwalk w/hand & intermediate rails	$1,494.00	285	lbs
62220	20’ 12ga Manwalk w/hand & intermediate rails	$2,915.00	551	lbs
62224	24’ 12ga Manwalk w/hand & intermediate rails	$3,495.00	641	lbs
62230	30’ 12ga Manwalk w/hand & intermediate rails	$4,607.00	867	lbs
62232	32’ 12ga Manwalk w/hand & intermediate rails	$5,080.00	921	lbs
62234	34’ 12ga Manwalk w/hand & intermediate rails	$5,335.00	966	lbs
62236	36’ 12ga Manwalk w/hand & intermediate rails	$5,589.00	1011	lbs
62240	40’ 12ga Manwalk w/hand & intermediate rails	$6,785.00	1067	lbs
62244	44’ 12ga Manwalk w/hand & intermediate rails	$7,167.00	1114	lbs
62248	48’ 12ga Manwalk w/hand & intermediate rails	$7,681.00	1194	lbs
60010	10’ Handrail Kit (Parts for handrail kit for Manwalk only)	$470.00	70	lbs
60012	12’ Handrail Kit (Parts for handrail kit for Manwalk only)	$577.00	85	lbs
98043	Cut in Hatch (Chief Manhole Package Complete)	$487.00	13	lbs

A-Series Manwalk

Product Line Card Available



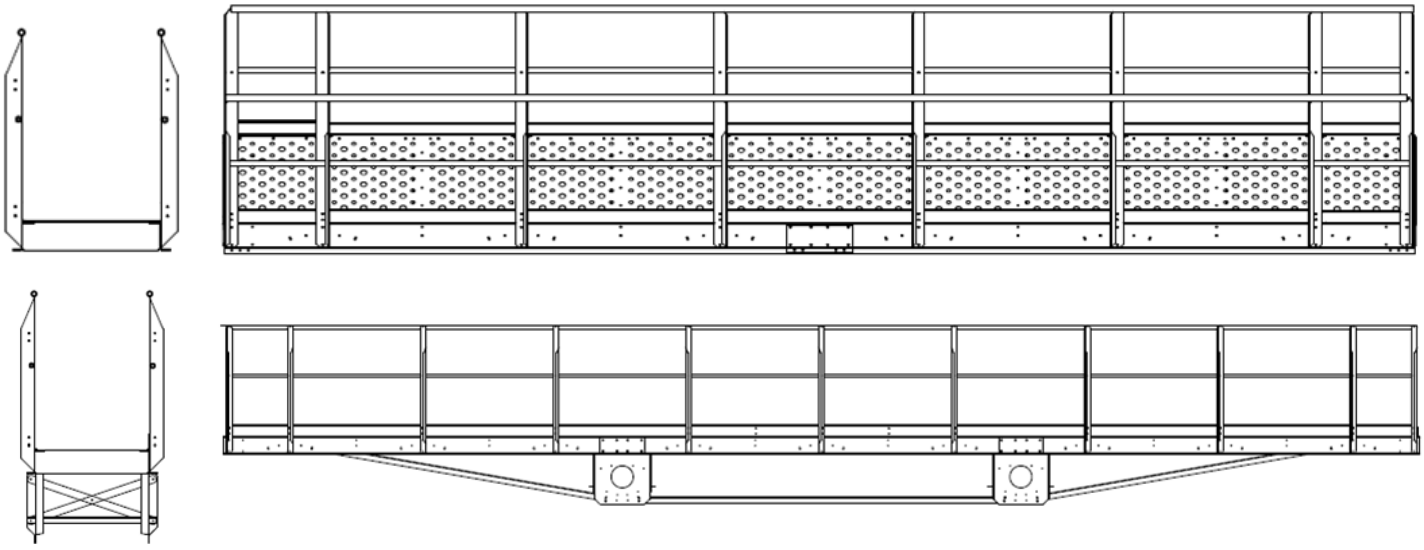

Ordering Information: *The A-Series Manwalk system is designed to support 60 psf in accordance with ASCE 7-2010, or 150 lbs per linear foot. Manwalk prefixed with AMA meet the minimum 60 psf standard. Manwalk prefixed with AMB are considered heavy duty and are used for greater load capacity. Walkway width is 30", and the overall width is 37.5"*

Item	Length	Description	List Price	Weight	
AMA03004	4'	4' A-Series Manwalk	$938.00	138	lbs
AMA03006	6'	6' A-Series Manwalk	$1,380.00	203	lbs
AMA03008	8'	8' A-Series Manwalk	$1,828.00	269	lbs
AMA03012	12'	12' A-Series Manwalk	$2,596.00	382	lbs
AMA03016	16'	16' A-Series Manwalk	$3,474.00	511	lbs
AMB03016	16'	16' A-Series Manwalk, Trussed	$3,956.00	582	lbs
AMA03020	20'	20' A-Series Manwalk	$4,240.00	624	lbs
AMB03020	20'	20' A-Series Manwalk, Trussed	$4,859.00	715	lbs
AMA03024	24'	24' A-Series Manwalk	$5,010.00	737	lbs
AMB03024	24'	24' A-Series Manwalk, Trussed	$5,858.00	862	lbs
AMA03028	28'	28' A-Series Manwalk	$5,885.00	866	lbs
AMB03028	28'	28' A-Series Manwalk, Trussed	$7,054.00	1038	lbs
AMA03032	32'	32' A-Series Manwalk, Trussed	$7,877.00	1159	lbs
AMA03036	36'	36' A-Series Manwalk, Trussed	$8,803.00	1295	lbs
AMB15036		A-Series Manwalk Mount	$674.00	108	lbs
AMW0001		A-Series Manwalk Close End Handrail Kit	$183.00	24	lbs

A-Series Variable Stairs

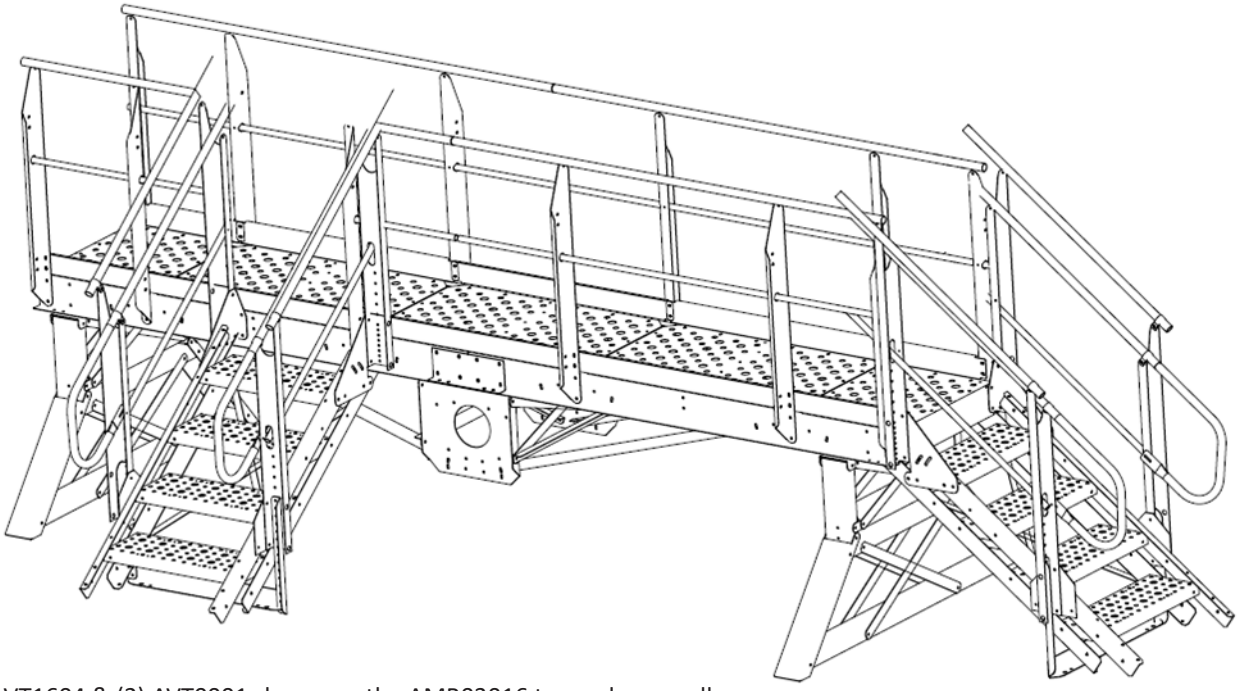

(2) AVT1604 & (2) AVT0001 shown on the AMB03016 trussed manwalk

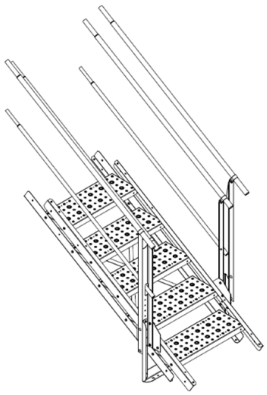

AVT1605

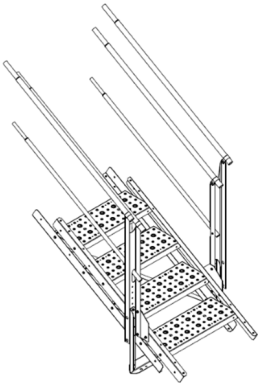

AVT1604

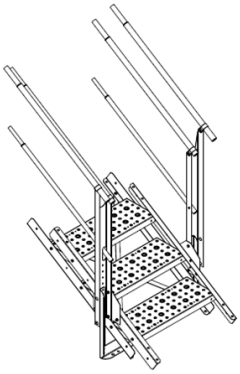

AVT1603

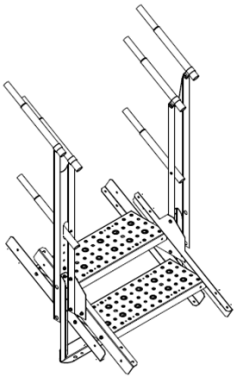

AVT1602

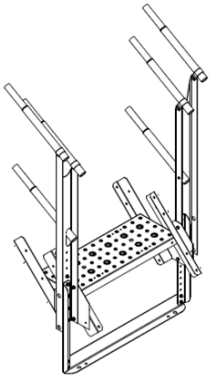

AVT1601

Item	Description	List Price	Weight	
AVT1601	A-Series 1 Step Variable Stair Section	$456.00	67	lbs
AVT1602	A-Series 2 Step Variable Stair Section	$604.00	89	lbs
AVT1603	A-Series 3 Step Variable Stair Section	$754.00	111	lbs
AVT1604	A-Series 4 Step Variable Stair Section	$905.00	133	lbs
AVT1605	A-Series 5 Step Variable Stair Section	$1,063.00	156	lbs
AVT0001	A-Series Variable Stair Manwalk Entry Kit	$262.00	39	lbs
	(bottom round rails included)			
ASG100	A-Series Self Closing Gate, Galvanized	$348.00	38	lbs

A-Series Foundation Deck

Product Line Card Available

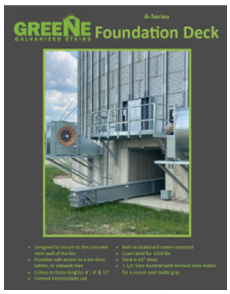

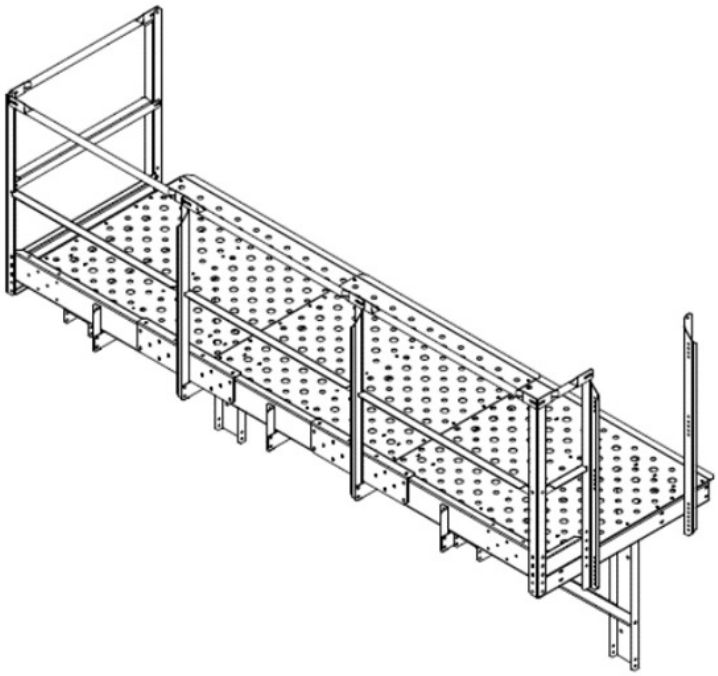

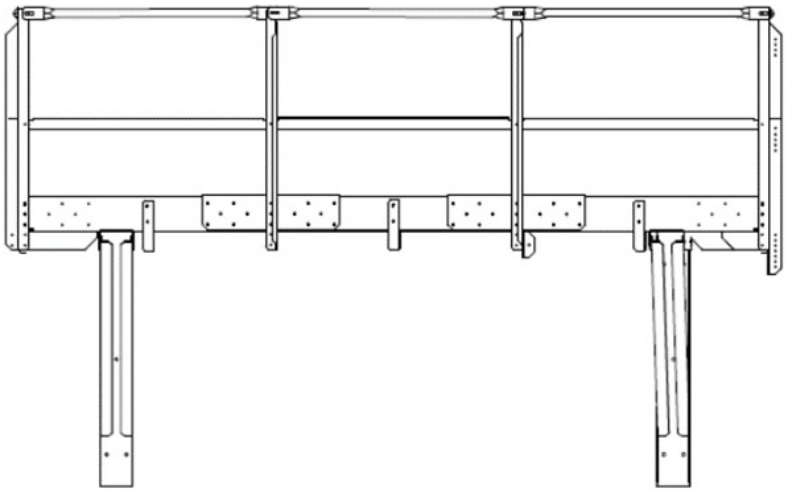

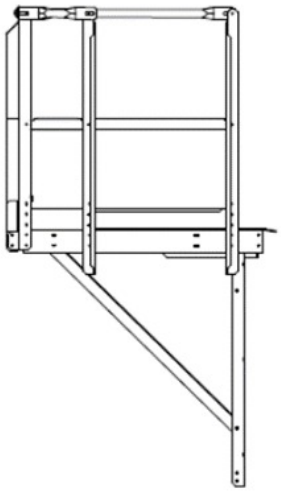

Ordering Information: *Designed for mounting to the concrete stem wall of the bin for access to the bin door, a ladder or a sidewall stair, particularly over tunnels. Ordered as a 3 section, 2 section or a single section. Load rated at 1000 lbs.*

Item	Description	List Price	Weight		Tunnel Width
AFD004	4 Section Foundation Deck 192”	$5,609.00	760	lbs	144”
AFD003	3 Section Foundation Deck 144”	$4,428.00	600	lbs	99”
AFD002	2 Section Foundation Deck 96”	$3,720.00	504	lbs	53”
AFD001	1 Section Foundation Deck 48”	$2,809.00	380	lbs	17”

Product Line Card Available

A-Series Tower Stairs



Call for quote

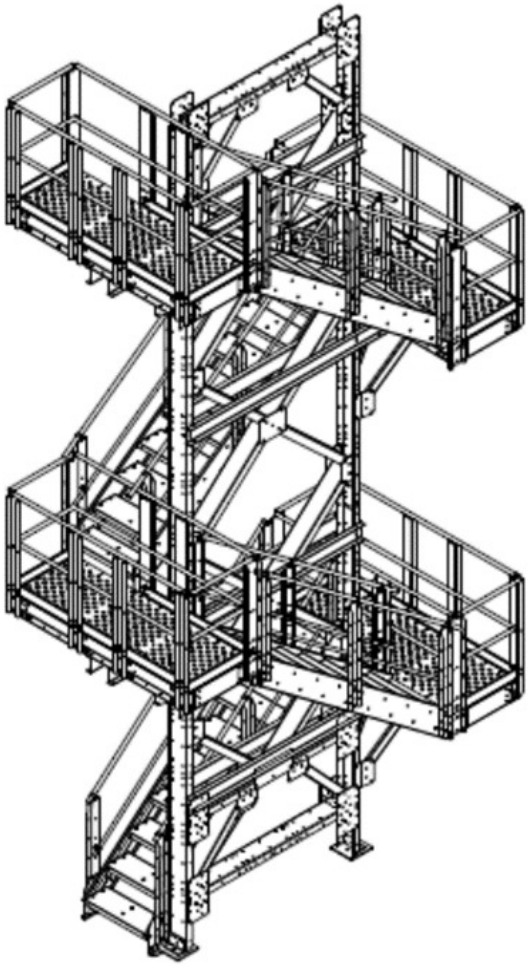

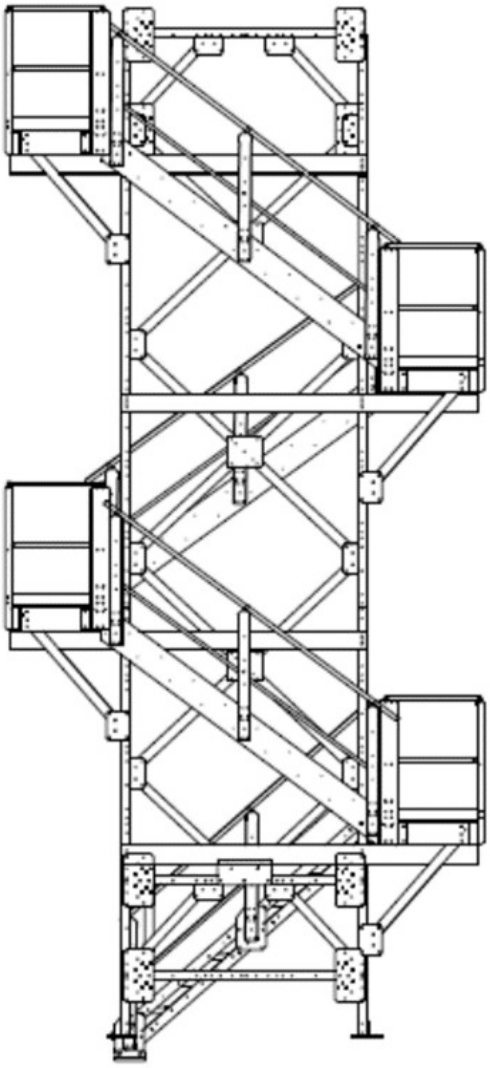

- *Heights to 100’ with 12’ tower stages*
- *Two Leg Tower Posts are 80” apart to create a 7’ x 14’ footprint*
- *Stair Flights are adjustable from 64”, 72”, and 80” to access multiple platform elevations*
- *Landing Platforms are 30” x 84” to allow for 30” walking surfaces*
- *Bolt-together construction*
- *Requires minimal foundations*
- *Great for upgraded access to replace ladders and reduce fall risk associated with ladders*
- *For use beside new or existing bin or silo, flat storage building, or leg tower*

Conveyor Support

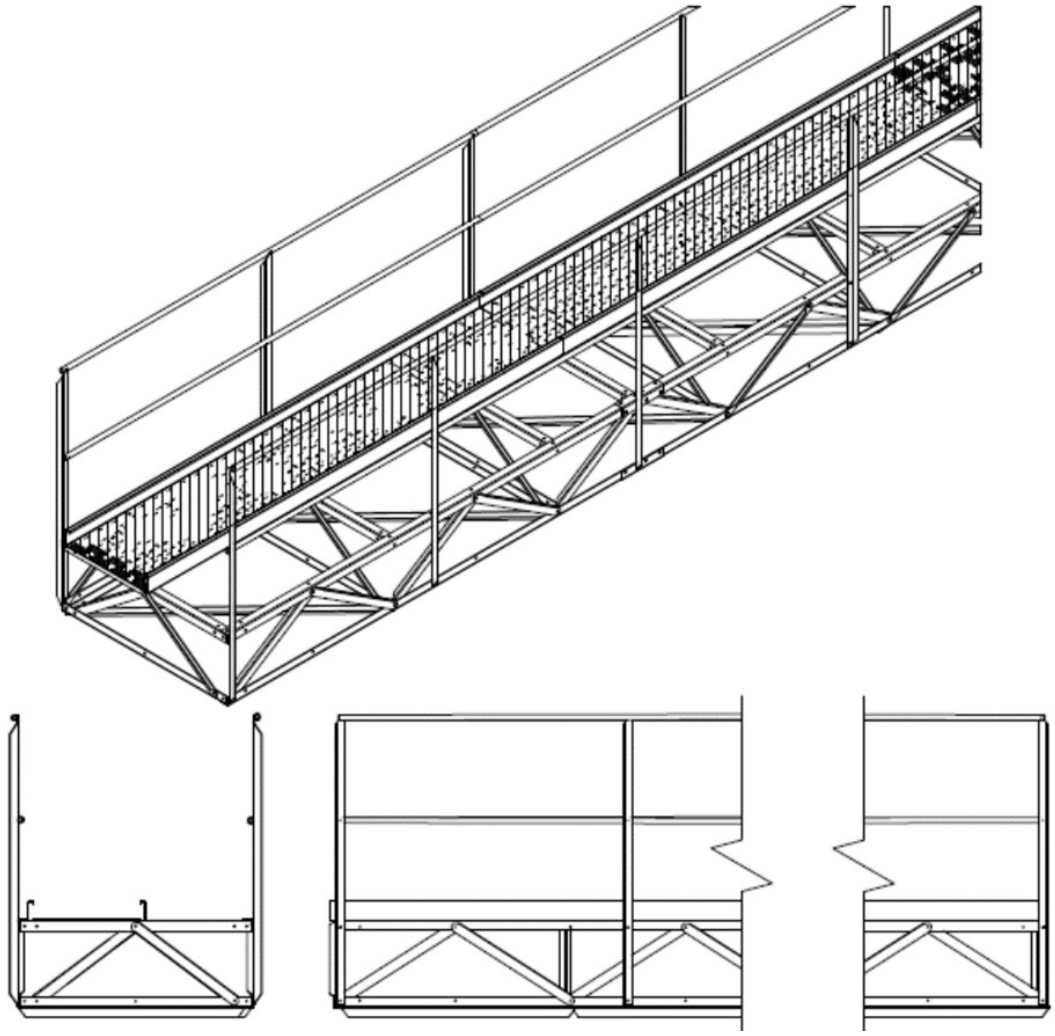

Ordering Information: *Manwalk pitch should not exceed 20° or 4.3":12". For steeper inclines, specify VP for variable pitch stair degree to 45°, or RS for roof stairs to 35°. Example: 69420VP or 69420RS. No extra charge for either option. The manwalk deck of the conveyor support consumes 26" of the width of the support. 48" support has 22" of conveyor space, 42" has 16" of conveyor space, 36" has 10" of conveyor space, and the 28" is for Bridged Manwalk. Allow 2" clearance from outside to kickboard on Manwalk.*

		List		
Item	Description	Price	Weight	
69280	10' 28"x17" Bridged Manwalk/Handrails	$2,733.00	302	lbs
69360	10' 36"x17" Conveyor Support/Handrails	$2,850.00	314	lbs
69420	10' 42"x17" Conveyor Support/Handrails	$2,940.00	324	lbs
69480	10' 48"x17" Conveyor Support/Handrails	$3,068.00	338	lbs
69882	10' 48"x17" Conveyor Support with 8ga siderails, double brace	$3,590.00	403	lbs
64420	10' 42"x27" Conveyor Support/Handrails	$3,098.00	342	lbs
64480	10' 48"x27" Conveyor Support/Handrails	$3,173.00	350	lbs
64485	10' 48"x27" Conveyor Support with 8ga siderails	$3,231.00	370	lbs
64882	10' 48"x27" Conveyor Support with 8ga siderails, double brace	$3,709.00	422	lbs

Conveyor Support Wall Mount Towers

Top down view of WMO102

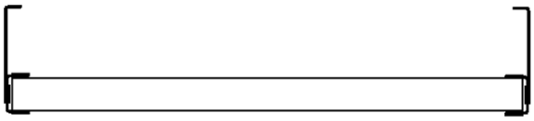

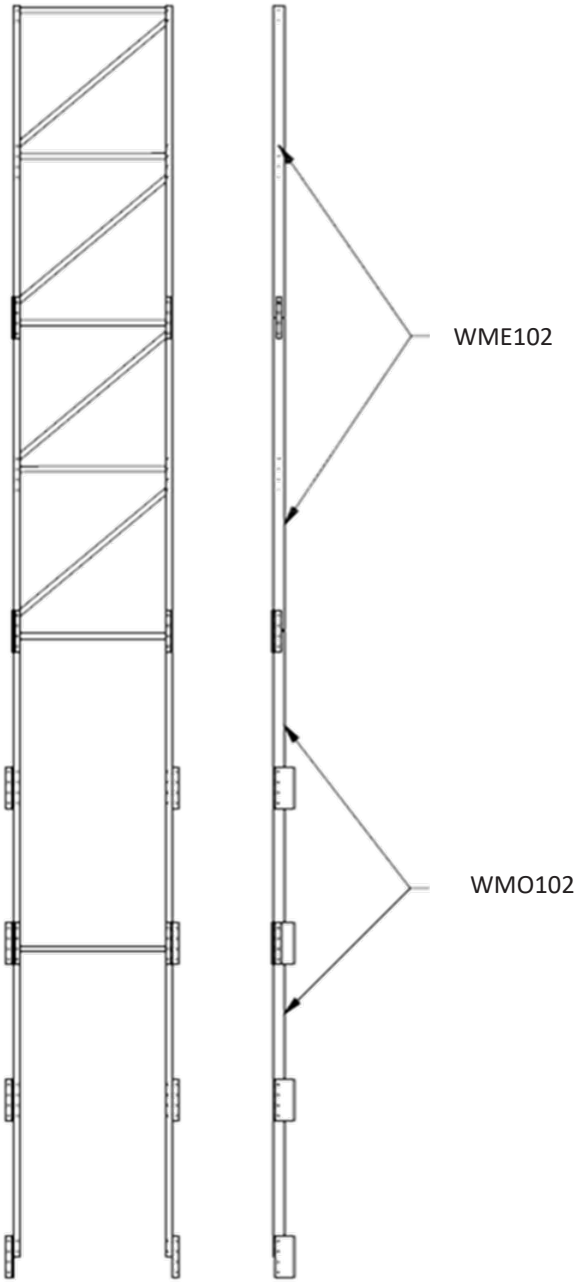

Ordering Information: *Use WMO102 from the eave to the concrete pad. Use WME102 for any height needed above the eave. Overall width of tower is 61" with 56" between the siderails. Clearance from bin wall is 8", the outside of the tower is 12" from the bin wall.*

		List		
Item	Description	Price	Weight	
WME102	10' Extension for Wall Mounted Support for 2 stiffener tank	$1,925.00	212	lbs
WMO102	10' Bin Wall Mounted Support for 2 stiffener tank	$1,507.00	168	lbs

Box Frame Support Towers

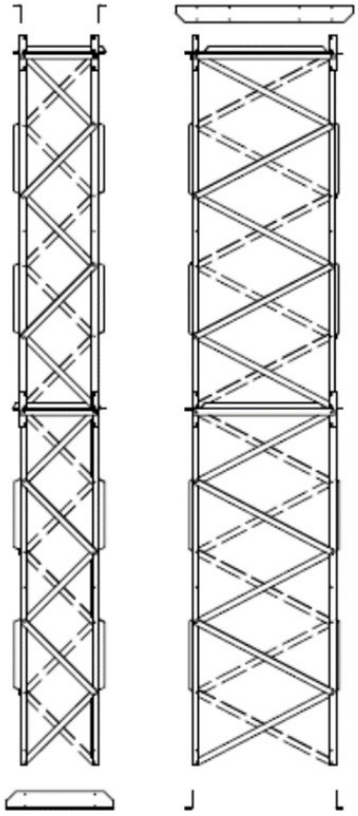

T48271, 48” x 27” Single Braced tower
with T60362 top and bottom flange kit.

T48272, 48” x 27”
Double Braced tower

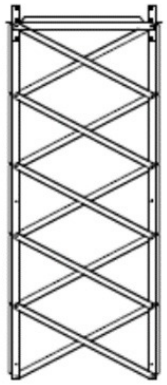

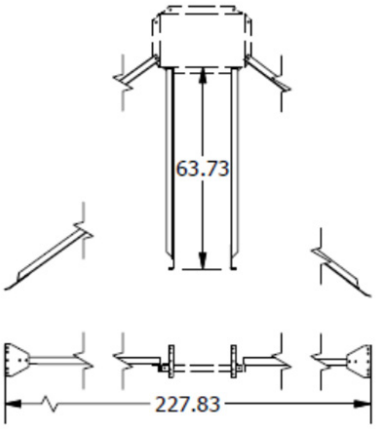

TSO105

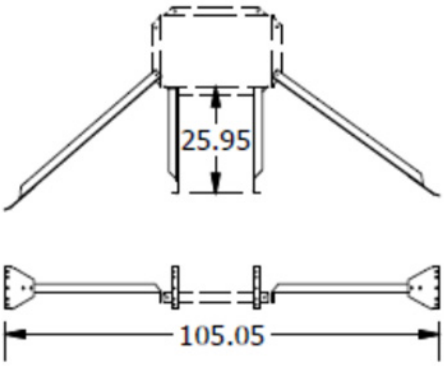

TSO100

Ordering Information: *Not to be used free standing, the box frame support towers require lateral bracing every 20’. The concrete pad footing should be below the frost line.*

Item	Description	List Price	Weight	
T17171	10’ 17”x17” Tower, single braced	$1,589.00	175	lbs
T17172	10’ 17”x17” Tower, double braced	$1,902.00	210	lbs
T27171	10’ 27”x17” Tower, single braced	$1,624.00	179	lbs
T27172	10’ 27”x17” Tower, double braced	$2,325.00	256	lbs
T36361	10’ 36”x36” Tower, single braced (for use with air systems)	$2,140.00	236	lbs
T48271	10’ 48”x27” Tower, single braced	$2,140.00	236	lbs
T48272	10’ 48”x27” Tower, double braced	$2,936.00	336	lbs
T48278	10’ 48”x27” 8 ga Tower, single braced	$2,325.00	256	lbs
T82782	10’ 48”x27” 8 ga Tower, double braced	$3,454.00	380	lbs
T48481	10’ 48”x48” Tower, single braced	$2,321.00	256	lbs
T48301	48” Top 30” Bottom 17” Tower	$620.00	68	lbs
T60362	60” Top 36” Bottom 27” Tower	$744.00	82	lbs
T00363	Bottom 36” x 36” Tower	$346.00	38	lbs
T00481	48” x 48” Top and Bottom	$799.00	88	lbs
TSO100	Tower Stand Off close 26”	$137.00	15	lbs
TSO105	Tower Stand Off 63”	$653.00	92	lbs

Support Rings

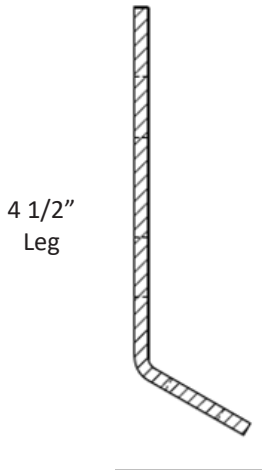

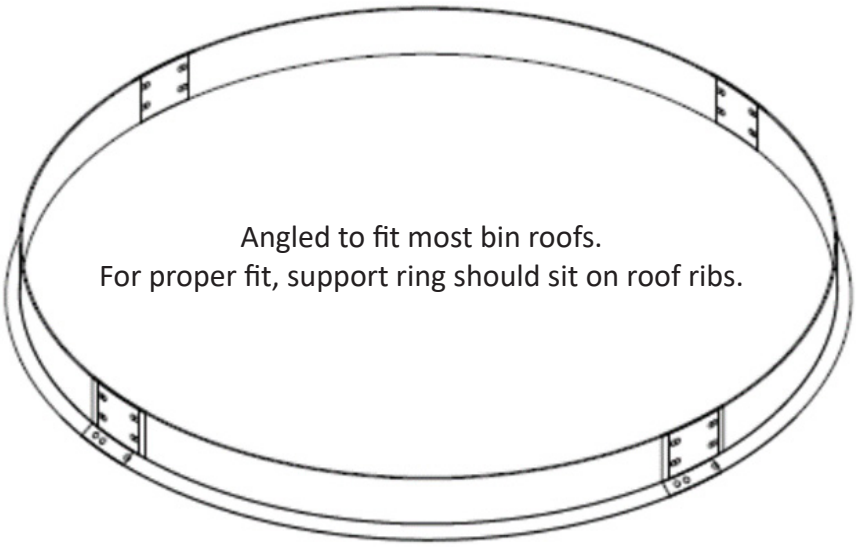

		List		
Item	Description	Price	Weight	
SR8050	50” Support Ring 3 section	$467.00	51	lbs
SR8066	66” Support Ring 4 section	$622.00	68	lbs
SR8083	83” Support Ring 5 section	$777.00	85	lbs
SR8100	100” Support Ring 6 section	$933.00	102	lbs
A1222	10’ 2” x 2” x 12ga Galvanized Angle GR	$111.00	15	lbs
A1022	10’ 2” x 2” x 10ga Galvanized Angle YW	$125.00	17	lbs
A0822	10’ 2” x 2” x 8ga Galvanized Angle OR	$174.00	23	lbs

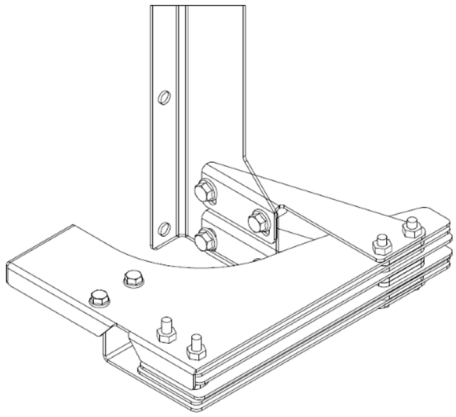

Greene Railing
Former depicted here

Tools

Item	Description	NET PRICE
NST01	Nutsert Tool	$122.00
NS100	Nutsert 100pk	$63.00
NUTNP	Nutsert Mandrel	$19.00
GRF150	Greene Railing Former	$62.00
HF99736	Tubing Roller Round Stock: 3/4 in. - 2 in.	$364.00
	Available from Harbor Freight	
29993	Ridgid Hand Deburrer	$134.00
	Available from Zoro	

Loop End Towers, 4’ x 4’

64451 45’ Loop Tower, 64590 5’ x 9’ Top Deck, MB212
Truck Spout and LC0045 Ladder and Cage depicted.

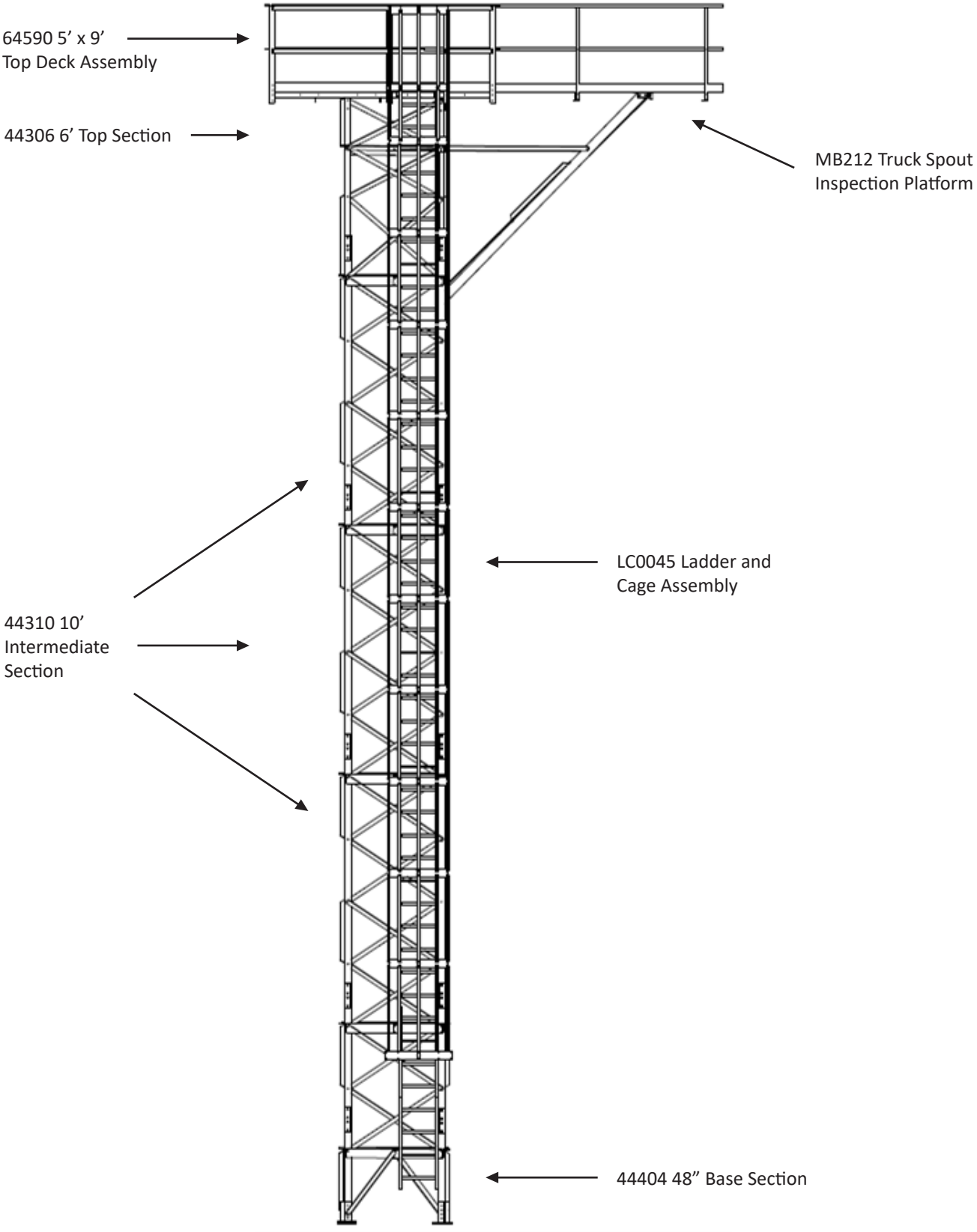

Loop End Towers

Part #	Description	43306 72" 3/16" Top	44304 40" 3/16" Top	44310 120" 3/16" Int.	44404 48" 1/4" Base	44405 60" 1/4" Int.	44410 120" 1/4" Leg	44504 48" 5/16" Base	Weight Lbs	Price	Ladder & Cage	Weight Lbs	Price
64201	20' Loop Tower	1		1	1				820	$6,363.00	LC0020	200	$2,124.00
64221	22.5' Loop Tower		1	1	1	1			992	$7,853.00	LC0025	230	$2,385.00
64251	25' Loop Tower	1		1	1	1			1035	$8,162.00			
64271	27.5' Loop Tower		1	2	1				1107	$8,654.00	LC0030	250	$2,910.00
64301	30' Loop Tower	1		2	1				1150	$8,768.00			
64321	32.5' Loop Tower		1	2	1	1			1322	$9,645.00	LC0035	380	$3,356.00
64351	35' Loop Tower	1		2	1	1			1365	$10,315.00			
64371	37.5' Loop Tower		1	3	1				1437	$10,948.00	LC0040	410	$3,698.00
64401	40' Loop Tower	1		3	1				1480	$11,378.00			
64421	42.5' Loop Tower		1	3	1	1			1652	$12,428.00	LC0045	455	$4,146.00
64451	45' Loop Tower	1		3	1	1			1695	$13,099.00			
64471	47.5' Loop Tower		1	3	1		1		1797	$13,668.00	LC0050	470	$4,486.00
64501	50' Loop Tower	1		3	1		1		1840	$14,337.00			
64521	52.5' Loop Tower		1	3		1	1	1	2017	$15,601.00	LC0055	500	$4,930.00
64551	55' Loop Tower	1		3		1	1	1	2060	$16,270.00			
64571*	57.5' Loop Tower		1	3			2	1	2162	$17,138.00	LC0060	550	$5,270.00
64601*	60' Loop Tower	1		3			2	1	2205	$17,505.00			
End Tower Sections													
43306	72" Loop Tower Top Section, 3/16" Leg								175	$1,254.00			
44304	40" Loop Tower Top Section, 3/16" Leg								132	$945.00			
44440	40" Loop Tower Top Section, 1/4" Leg								136	$1,063.00			
44310	120" Loop Tower Intermediate Section, 3/16" Leg								330	$2,365.00			
44405	60" Loop Tower Intermediate Section, 1/4" Leg								215	$1,564.00			
44410	120" Loop Tower Intermediate Section, 1/4" Leg								360	$2,719.00			
44404	48" Loop Tower Base Section, 1/4" Leg								315	$2,979.00			
44504	48" Loop Tower Base Section, 5/16" Leg								320	$3,340.00			
Other Tower Accessories													
64-AT002	Anchor Template Included with tower order								15				
64230	Ladder Platform (Includes additional 5' ladder)								231	$1,531.00			
64550	5 x 5 Top Deck								350	$2,390.00			
64590	5 x 9 Top Deck								540	$4,541.00			
MB212	Manwalk and Supports to service truck load spout								407	$2,330.00			
LC0010	10' Ladder and Cage (no top or flare)								100	$948.00			
*57.5' and 60' Loop Towers are ONLY to be used with a 10" or smaller loop tube.													

Wall Mount Loop Supports

(Not for Manwalk or Conveyor Support)

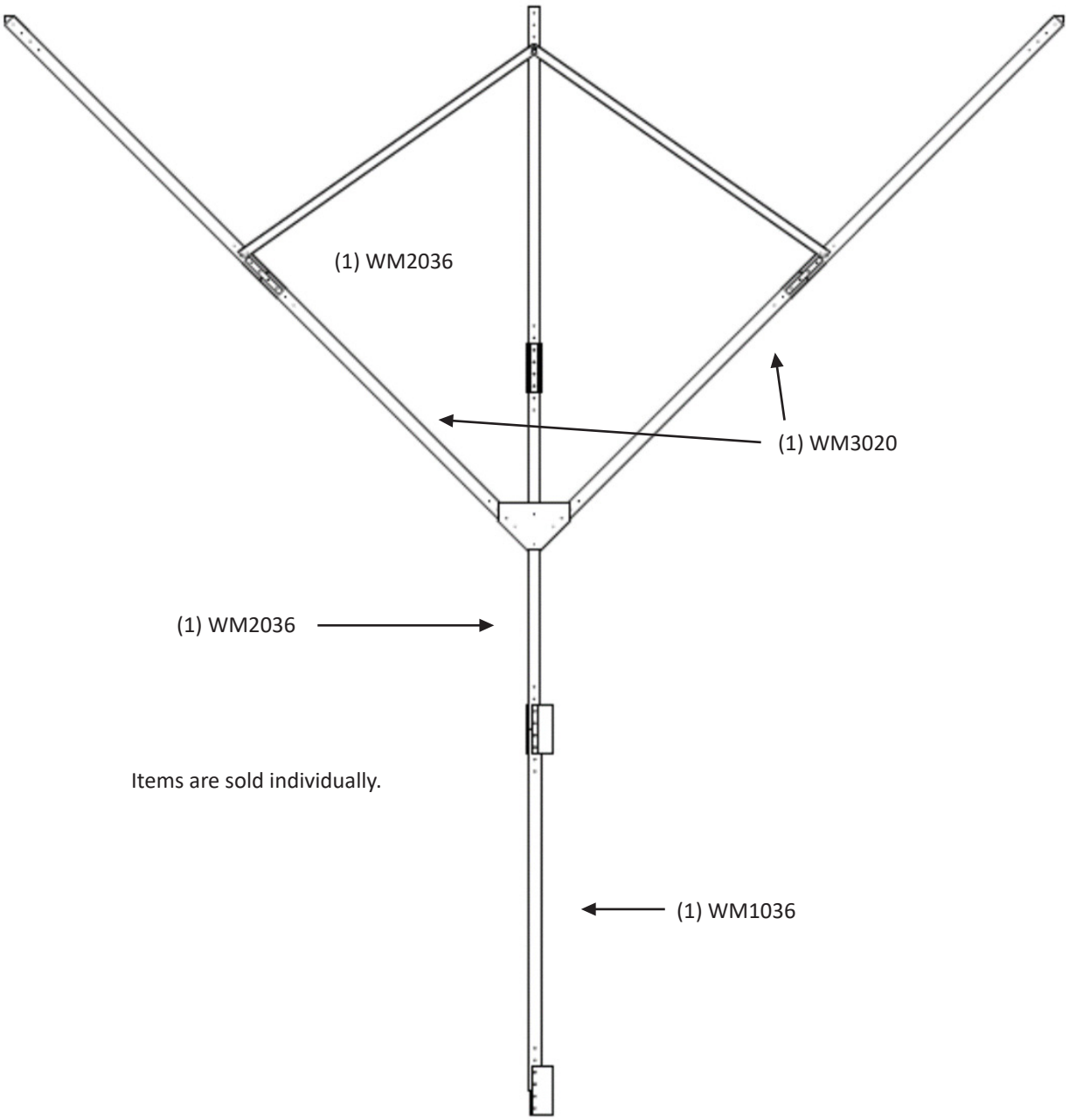

Ordering Information:

- *Order 1 WM1036 for every 10’ of sidewall height, plus extensions and kickers above the eave*
- *WM3020 has 20’ long siderails and overall spread of kickers is 28’ (14’ on center)*
- *WM3010 has 10’ long siderails and overall spread of kickers is 16’ (8’ on center)*
- *Overall width 36” with 31” between siderails*
- *Clearance from bin wall is 8”, the outside of the tower is 12” from the bin wall*

Wall Mount Loop Supports

(Not for Manwalk or Conveyor Support)

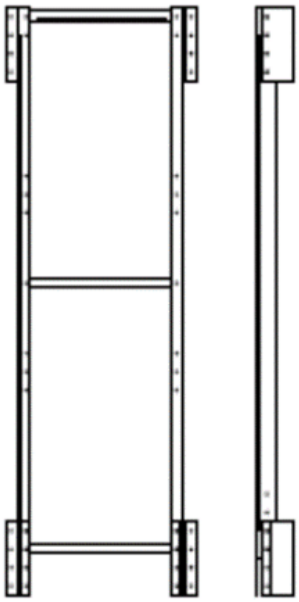

WM1036

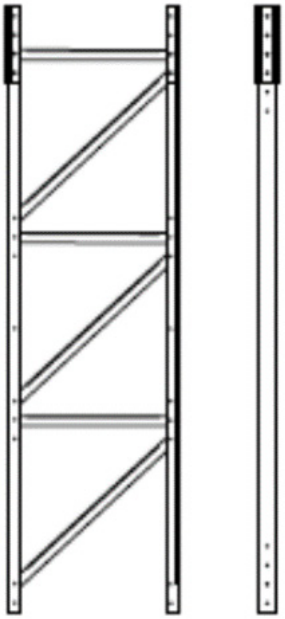

WM2036

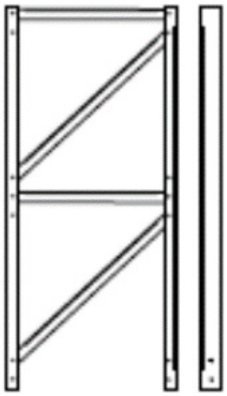

WM2836

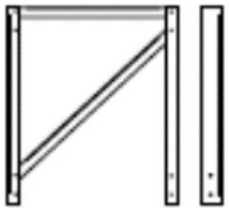

WM2436

Top down view of
WM1036

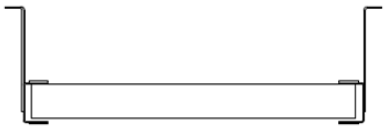

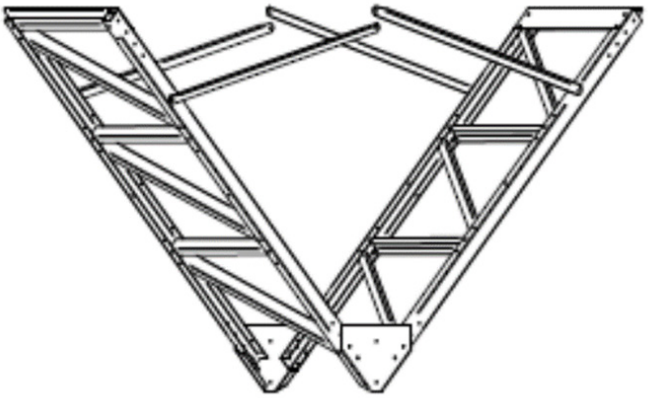

WM3010
Wall Mount Tower not included with kicker packages

		List		
Item	Description	Price	Weight	
WM1036	Wall Loop Support Bin Wall Section	$993.00	160	lbs
WM2036	Wall Loop 10’ Extension (for use above eave)	$993.00	160	lbs
WM2436	Wall Loop 40” Extension (for use on top of tower only)	$386.00	60	lbs
WM2536	Wall Loop 50” Extension (for use on top of tower only)	$439.00	70	lbs
WM2836	Wall Loop 80” Extension (for use on top of tower only)	$702.00	111	lbs
WM3010	10’ Wall Loop Kicker	$2,551.00	390	lbs
WM3020	20’ Wall Loop Kicker	$5,094.00	778	lbs

Contact Information

General Sales and Customer Service

Sumer Horton sumer@greenebinstairs.com

Holly Pagan holly@greenebinstairs.com

Mike Adamas mike@greenstairs.com

Bill Huff bill@greenestairs.com

Shipping

Ashee Lewis ashlee@greenstairs.com

Inquiries

info@greenestairs.com

Orders

orders@greenebinstairs.com

Office Hours: Monday - Friday 7:30-4 pm
Shipping Hours: Monday to Friday 7:30-3:30 pm
Same day shipping cutoff is 10am
All times Central

All our Product Line Cards can be found on our website Awww.greenestairs.com/resources/brochures

Stairs and Safe Access Equipment manufactured by the ORIGINATORS of Grain Bin Stairs.

MADE IN THE USA

Greene Stairs LLC is an ISO 9001:2015 registered company

41774 Main Street; PO Box 191
East Lynn, IL 60932
217-375-4244; Fax 217-375-4245

All Galvanized Material
F.O.B. East Lynn IL 60932
Prices subject to change without notice